PD-1-IN-24: A Technical Guide for Cancer Immunology Research

Author: BenchChem Technical Support Team. **Date**: April 2026

Compound of Interest

Compound Name:	*PD-1-IN-24*
Cat. No.:	*B10828067*

Get Quote

For Researchers, Scientists, and Drug Development Professionals

Introduction

PD-1-IN-24 is an orally active, small molecule inhibitor of the programmed cell death-1 (PD-1) receptor. By disrupting the interaction between PD-1 and its ligand, PD-L1, **PD-1-IN-24** aims to restore anti-tumor immunity. This technical guide provides a comprehensive overview of **PD-1-IN-24**, including its mechanism of action, key in vitro and in vivo data, and detailed experimental protocols to facilitate its evaluation in cancer immunology research.

Core Data Summary

Chemical and Physical Properties

Property	Value
CAS Number	2360909-50-6
Molecular Formula	$C_{27}H_{26}F_3NO_3$
Molecular Weight	469.5 g/mol
Description	Orally active PD-1 inhibitor

© 2026 BenchChem. All rights reserved.

In Vitro Activity

Assay	Parameter	Value	Reference
PD-1/PD-L1 Inhibition	IC_{50}	1.57 nM	[1]
T Cell-Tumor Co-culture	IFN-γ Secretion	Dose-dependent increase	[1]

In Vivo Efficacy

Tumor Model	Animal Model	Treatment	TGI (%)	Reference
4T1 Murine Breast Cancer	BALB/c mice	15 mg/kg, PO, BID	19.96	[2]
B16F10 Melanoma	Not Specified	30 mg/kg, PO, BID	35.59	[2]
B16F10 Melanoma	Not Specified	60 mg/kg, PO, BID	38.87	[2]
B16F10 Melanoma	Not Specified	120 mg/kg, PO, BID	47.35	[2]

TGI: Tumor Growth Inhibition; PO: Per os (by mouth); BID: Bis in die (twice a day)

Mechanism of Action and Signaling Pathway

PD-1-IN-24 functions as an immune checkpoint inhibitor by blocking the interaction between the PD-1 receptor on activated T cells and its ligand, PD-L1, which is often overexpressed on tumor cells. This interaction typically leads to the suppression of T cell activity, allowing cancer cells to evade the immune system. By inhibiting this binding, **PD-1-IN-24** restores the ability of T cells to recognize and eliminate cancer cells.

© 2026 BenchChem. All rights reserved.

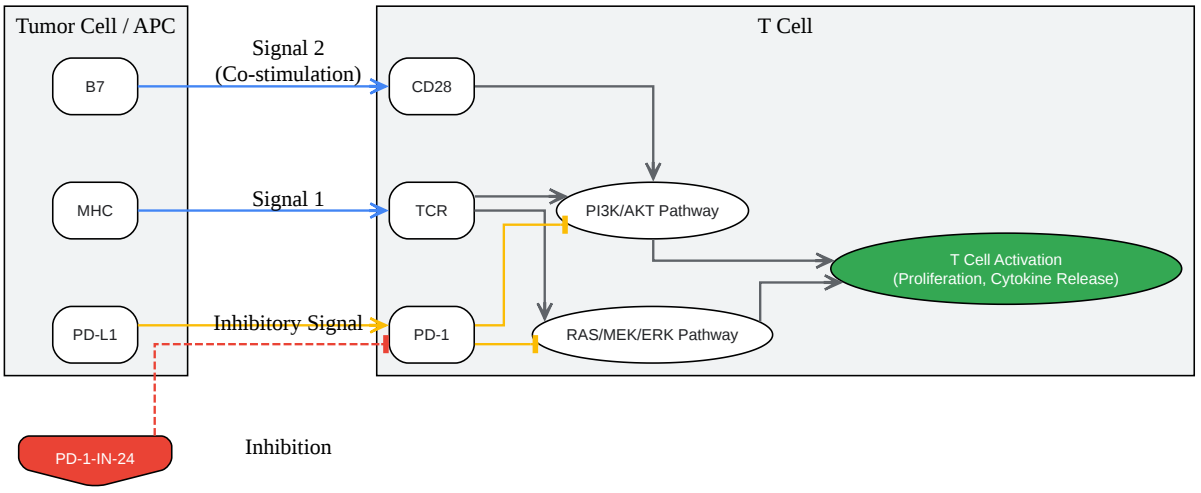

Click to download full resolution via product page

PD-1/PD-L1 signaling pathway and the inhibitory action of **PD-1-IN-24**.

Experimental Protocols

The following are generalized protocols based on standard methodologies for assays relevant to the evaluation of PD-1/PD-L1 inhibitors. For specific parameters used for **PD-1-IN-24**, it is highly recommended to consult the primary publication: Wang Y, et al. Eur J Med Chem. 2022;229:113998.

PD-1/PD-L1 Homogeneous Time-Resolved Fluorescence (HTRF) Assay

This assay is designed to quantify the binding inhibition between PD-1 and PD-L1.

Materials:

- Recombinant human PD-1 and PD-L1 proteins (tagged, e.g., with 6xHis and Fc)

© 2026 BenchChem. All rights reserved.

- HTRF donor and acceptor antibodies (e.g., anti-6xHis-Eu3+ and anti-Fc-XL665)
- Assay buffer (e.g., PBS with 0.1% BSA and 0.05% Tween-20)
- 384-well low-volume white plates
- **PD-1-IN-24**
- HTRF-compatible plate reader

Procedure:

- Prepare serial dilutions of **PD-1-IN-24** in the assay buffer.
- Add a small volume (e.g., 2 µL) of the diluted compound or vehicle control to the wells of the 384-well plate.
- Add a solution of tagged PD-L1 protein to the wells and incubate for a defined period (e.g., 15 minutes) at room temperature.
- Add a solution of tagged PD-1 protein to the wells and incubate for another defined period (e.g., 15 minutes) at room temperature.
- Add the HTRF donor and acceptor antibody mixture to the wells.
- Incubate the plate in the dark at room temperature for a specified time (e.g., 1 hour).
- Read the plate on an HTRF-compatible reader at the appropriate wavelengths for the donor and acceptor fluorophores.
- Calculate the HTRF ratio and determine the IC_{50} value for **PD-1-IN-24**.

© 2026 BenchChem. All rights reserved.

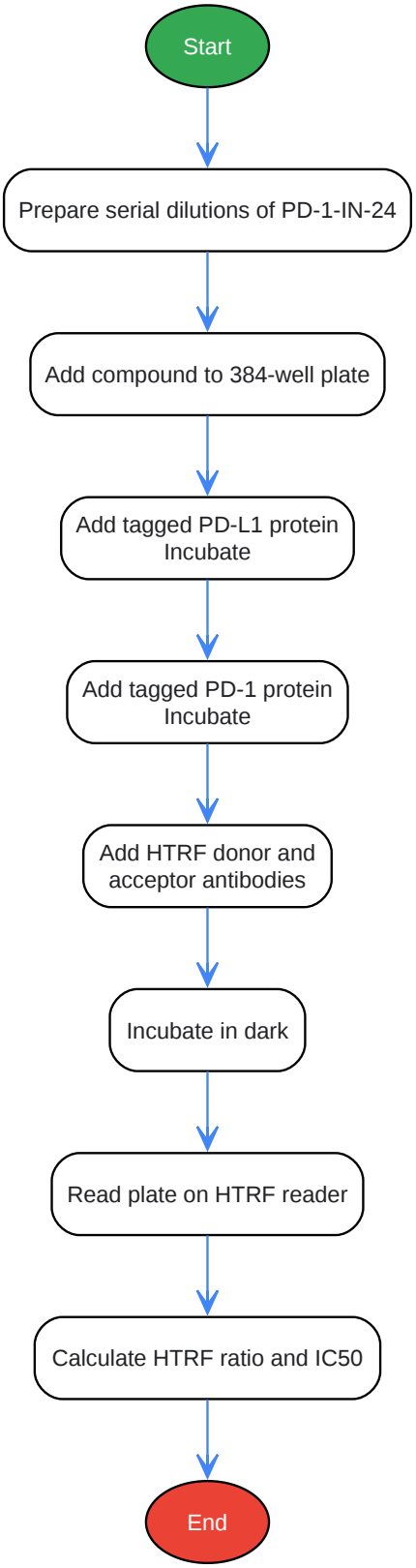

Click to download full resolution via product page

Generalized workflow for a PD-1/PD-L1 HTRF assay.

© 2026 BenchChem. All rights reserved.

In Vivo Murine Syngeneic Tumor Models (4T1 and B16F10)

These models are used to assess the anti-tumor efficacy of **PD-1-IN-24** in an immunocompetent setting.

Materials:

- 4T1 (murine breast carcinoma) or B16F10 (murine melanoma) cell lines
- Female BALB/c (for 4T1) or C57BL/6 (for B16F10) mice, 6-8 weeks old
- Complete cell culture medium (e.g., RPMI-1640 with 10% FBS)
- Phosphate-buffered saline (PBS)
- **PD-1-IN-24** formulated for oral administration
- Calipers for tumor measurement

Procedure:

- Culture 4T1 or B16F10 cells to ~80% confluency.
- Harvest and wash the cells with PBS. Resuspend the cells in PBS at the desired concentration (e.g., 1 x 10^6 cells/100 µL).
- Subcutaneously inject the cell suspension into the flank of the mice.
- Monitor the mice for tumor growth. Once tumors reach a palpable size (e.g., 50-100 mm^3), randomize the mice into treatment and control groups.
- Administer **PD-1-IN-24** orally (e.g., by gavage) at the desired dose and schedule (e.g., 15, 30, 60, 120 mg/kg, twice daily). The control group receives the vehicle.
- Measure tumor dimensions with calipers every 2-3 days and calculate tumor volume (Volume = 0.5 x Length x $Width^2$).

© 2026 BenchChem. All rights reserved.

- Monitor the body weight of the mice as an indicator of toxicity.
- At the end of the study, euthanize the mice and excise the tumors for further analysis (e.g., weighing, immunohistochemistry).
- Calculate the Tumor Growth Inhibition (TGI) for each treatment group compared to the control group.

© 2026 BenchChem. All rights reserved.

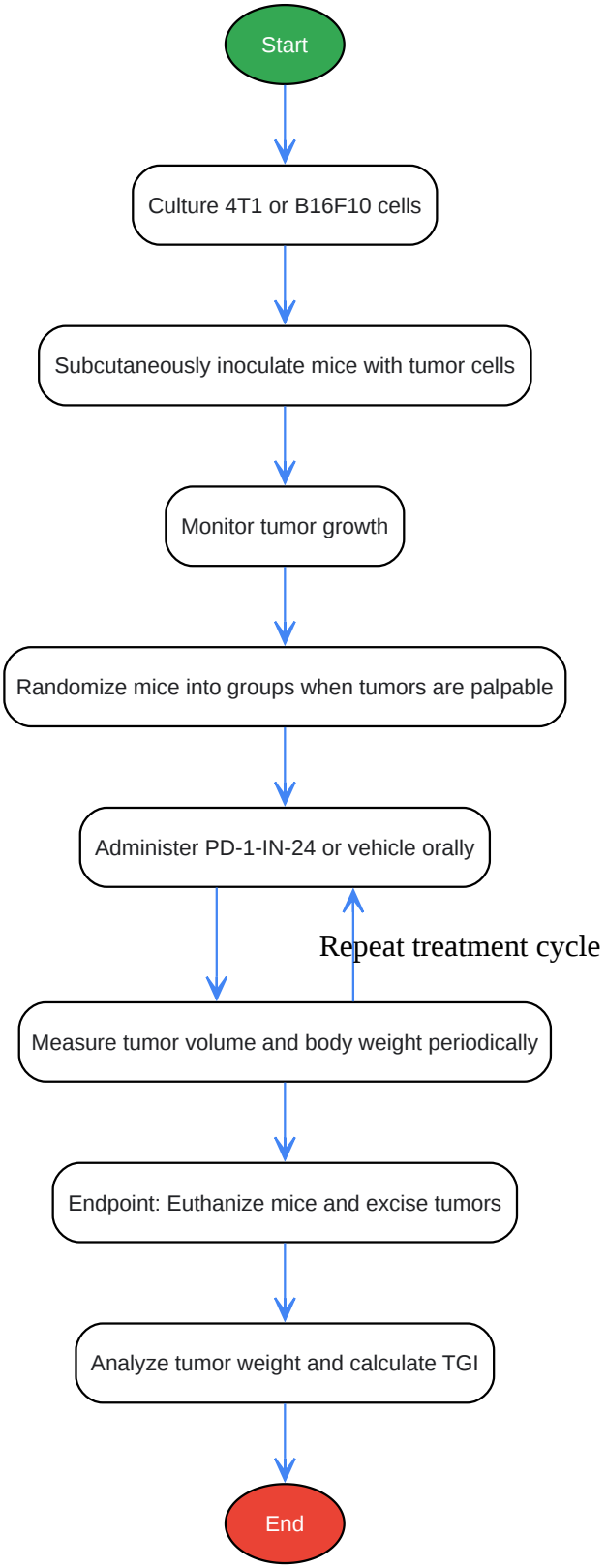

Click to download full resolution via product page

Generalized workflow for in vivo efficacy studies.

© 2026 BenchChem. All rights reserved.

Conclusion

PD-1-IN-24 is a potent, orally available small molecule inhibitor of the PD-1/PD-L1 interaction. The data presented in this guide demonstrate its potential as a promising candidate for cancer immunotherapy. The provided experimental protocols offer a framework for researchers to further investigate its efficacy and mechanism of action. For detailed and specific experimental conditions, consulting the primary literature is strongly advised.

Need Custom Synthesis?

BenchChem offers custom synthesis for rare earth carbides and specific isotopiclabeling.

Email: info@benchchem.com or Request Quote Online.

References

- 1. pubs.acs.org [pubs.acs.org]
- 2. mdpi.com [mdpi.com]
- To cite this document: BenchChem. [PD-1-IN-24: A Technical Guide for Cancer Immunology Research]. BenchChem, [2026]. [Online PDF]. Available at: [https://www.benchchem.com/product/b10828067/docs#pd-1-in-24-a-technical-guide-for-cancer-immunology-research]

Disclaimer & Data Validity:

The information provided in this document is for Research Use Only (RUO) and is strictly not intended for diagnostic or therapeutic procedures. While BenchChem strives to provide accurate protocols, we make no warranties, express or implied, regarding the fitness of this product for every specific experimental setup.

Technical Support: The protocols provided are for reference purposes. Unsure if this reagent suits your experiment?

Need Industrial/Bulk Grade? Request Custom Synthesis Quote

BenchChem

Our mission is to be the trusted global source of essential and advanced chemicals, empowering scientists and researchers to drive progress in science and industry.

Contact

Address: 3281 E Guasti Rd

Ontario, CA 91761, United States

Phone: (601) 213-4426

Email: info@benchchem.com

Contact our Ph.D. Support Team for a compatibility check

© 2026 BenchChem. All rights reserved.