Troubleshooting unexpected results with BAY-091

Author: BenchChem Technical Support Team. **Date**: April 2026

Compound of Interest

Compound Name:	*BAY-091*
Cat. No.:	*B10825119*

Get Quote

Technical Support Center: BAY-091

Welcome to the technical support center for **BAY-091**, a potent and highly selective inhibitor of phosphatidylinositol-5-phosphate 4-kinase type-2 alpha (PIP4K2A). This resource is designed to assist researchers, scientists, and drug development professionals in troubleshooting unexpected results and optimizing their experiments with **BAY-091**.

Frequently Asked Questions (FAQs)

Q1: What is the mechanism of action for **BAY-091**?

A1: **BAY-091** is an ATP-dependent inhibitor of PIP4K2A.[1][2] This enzyme catalyzes the conversion of phosphatidylinositol-5-phosphate (PI5P) to phosphatidylinositol 4,5-bisphosphate (PI(4,5)P2).[3][4] By inhibiting PIP4K2A, **BAY-091** is expected to decrease the levels of PI(4,5)P2 derived from PI5P.

Q2: What is the recommended solvent and storage condition for **BAY-091**?

A2: **BAY-091** is soluble in DMSO, with a solubility of up to 50 mM with gentle warming.[1][5] For long-term storage, it is recommended to store the compound at -20°C.[1][2] Stock solutions can

© 2026 BenchChem. All rights reserved.

be stored at -80°C for up to 6 months or at -20°C for up to 1 month.[6]

Q3: I am observing target engagement with **BAY-091** in my Cellular Thermal Shift Assay (CETSA), but I do not see the expected downstream effects in my cellular assays. Why is this happening?

A3: This is a documented observation with **BAY-091**.[3][4] While **BAY-091** effectively binds to PIP4K2A in cells, this may not always translate to the anticipated biological outcome, such as anti-proliferative effects in p53-deficient tumor cells.[3][4] Potential reasons for this discrepancy are addressed in the troubleshooting guides below.

Troubleshooting Guides

Issue 1: Inconsistent or No Inhibition of PIP4K2A Activity in Biochemical Assays

Possible Causes and Solutions:

- Incorrect Assay Conditions: The inhibitory activity of **BAY-091** is dependent on the ATP concentration in the assay.[1][5]
  - Recommendation: Ensure your assay buffer conditions, particularly the ATP concentration, are appropriate. Refer to the table below for reported IC50 values at different ATP concentrations.
- Compound Instability: Improper storage or handling can lead to the degradation of **BAY-091**.
  - Recommendation: Prepare fresh dilutions of **BAY-091** in DMSO for each experiment. Avoid repeated freeze-thaw cycles of the stock solution.
- Assay Interference: Components of your assay may interfere with the detection method.
  - Recommendation: Run appropriate controls, including a no-enzyme control and a vehicle (DMSO) control, to identify any assay artifacts.

Quantitative Data Summary: In Vitro Inhibition of PIP4K2A by **BAY-091**

© 2026 BenchChem. All rights reserved.

Assay Type	ATP Concentration	IC50 of BAY-091	Reference
ADP-Glo	10 µM	1.3 nM	[1][5]
HTRF	10 µM	8.5 nM	[1][5]
HTRF	2 mM	16.4 nM	[1][5]

Issue 2: Confirmed Target Engagement (e.g., via CETSA) but Lack of Downstream Cellular Effects

Possible Causes and Solutions:

- Cellular Context: The function of PIP4K2A and the consequences of its inhibition can be highly cell-type specific.
  - Recommendation: Investigate the expression levels of PIP4K2A and other related kinases in your cell line. The signaling pathway's redundancy in your specific cell model might compensate for the inhibition of PIP4K2A.
- Experimental Timeline: The downstream effects of PIP4K2A inhibition may require a longer duration to become apparent.
  - Recommendation: Conduct a time-course experiment to assess the effects of **BAY-091** at various time points.
- Off-Target Effects at High Concentrations: While **BAY-091** is highly selective, using it at excessively high concentrations could lead to off-target effects that might mask the intended biological outcome.
  - Recommendation: Perform a dose-response experiment to determine the optimal concentration of **BAY-091** that shows target engagement without inducing off-target effects.

Experimental Protocols

© 2026 BenchChem. All rights reserved.

Cellular Thermal Shift Assay (CETSA) for Target Engagement

This protocol is a general guideline and should be optimized for your specific cell line and experimental setup.

- Cell Treatment:
  - Culture your cells of interest to approximately 80-90% confluency.
  - Treat the cells with the desired concentrations of **BAY-091** or vehicle (DMSO) for 1-2 hours at 37°C.
- Heat Challenge:
  - Aliquot the treated cell suspensions into PCR tubes.
  - Heat the tubes at a range of temperatures (e.g., 40°C to 70°C) for 3 minutes using a thermocycler, followed by cooling to 4°C.
- Cell Lysis and Protein Quantification:
  - Lyse the cells by freeze-thaw cycles or using a suitable lysis buffer.
  - Separate the soluble fraction (containing non-denatured protein) from the aggregated protein by centrifugation.
  - Quantify the amount of soluble PIP4K2A in the supernatant by Western blotting or other protein detection methods.
- Data Analysis:
  - Plot the amount of soluble PIP4K2A as a function of temperature for both **BAY-091**-treated and vehicle-treated samples. A shift in the melting curve indicates target engagement.

ADP-Glo™ Kinase Assay for Biochemical Potency

This is a luminescent assay that measures ADP production to quantify kinase activity.

© 2026 BenchChem. All rights reserved.

- Kinase Reaction:
  - Set up the kinase reaction in a multiwell plate containing PIP4K2A enzyme, substrate (PI5P), and varying concentrations of **BAY-091** in a kinase reaction buffer with a defined ATP concentration.
- Reaction Termination and ATP Depletion:
  - Add ADP-Glo™ Reagent to terminate the kinase reaction and deplete the remaining ATP. Incubate for 40 minutes at room temperature.
- ADP to ATP Conversion and Signal Detection:
  - Add Kinase Detection Reagent to convert ADP to ATP and generate a luminescent signal. Incubate for 30-60 minutes at room temperature.
  - Measure the luminescence using a plate reader. The signal intensity is proportional to the amount of ADP produced and inversely proportional to the kinase inhibition.

Visualizations

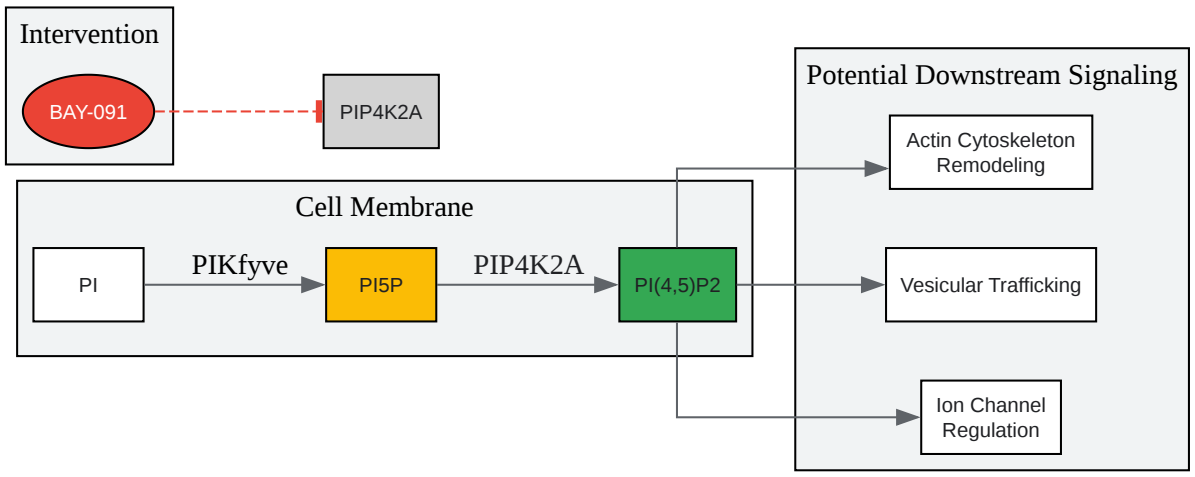

Click to download full resolution via product page

© 2026 BenchChem. All rights reserved.

Caption: The signaling pathway of PIP4K2A and the inhibitory action of **BAY-091**.



Click to download full resolution via product page

Caption: A logical workflow for troubleshooting unexpected results with **BAY-091**.

© 2026 BenchChem. All rights reserved.

Need Custom Synthesis?

BenchChem offers custom synthesis for rare earth carbides and specific isotopiclabeling.

Email: info@benchchem.com or Request Quote Online.

References

- 1. ADP-Glo™ Kinase Assay Protocol [promega.com]
- 2. BAY 091 (CAS 2922280-34-8): R&D Systems [rndsystems.com]
- 3. promega.com [promega.com]
- 4. ulab360.com [ulab360.com]
- 5. benchchem.com [benchchem.com]
- 6. medchemexpress.com [medchemexpress.com]

- To cite this document: BenchChem. [Troubleshooting unexpected results with BAY-091]. BenchChem, [2026]. [Online PDF]. Available at: [https://www.benchchem.com/product/b10825119/docs#troubleshooting-unexpected-results-with-bay-091]

Disclaimer & Data Validity:

The information provided in this document is for Research Use Only (RUO) and is strictly not intended for diagnostic or therapeutic procedures. While BenchChem strives to provide accurate protocols, we make no warranties, express or implied, regarding the fitness of this product for every specific experimental setup.

Technical Support: The protocols provided are for reference purposes. Unsure if this reagent suits your experiment?

Need Industrial/Bulk Grade? Request Custom Synthesis Quote

© 2026 BenchChem. All rights reserved.

BenchChem

Our mission is to be the trusted global source of essential and advanced chemicals, empowering scientists and researchers to drive progress in science and industry.

Contact

Address: 3281 E Guasti Rd

Ontario, CA 91761, United States

Phone: (601) 213-4426

Email: info@benchchem.com

Contact our Ph.D. Support Team for a compatibility check

© 2026 BenchChem. All rights reserved.