Application Notes and Protocols for PCB Layout of the CMD178 Mixer

Author: BenchChem Technical Support Team. **Date**: April 2026

Compound of Interest

Compound Name: *Cmd178 tfa*

Cat. No.: *B10825517*

Get Quote

For Researchers, Scientists, and Drug Development Professionals

This document provides detailed application notes and protocols for the printed circuit board (PCB) layout of the Qorvo CMD178, a passive double-balanced mixer. Adherence to these guidelines is critical for achieving optimal performance in demanding applications such as satellite communications, Ku-band radar, and electronic warfare systems.[1]

Introduction to the CMD178 Mixer

The CMD178 is a fundamental double-balanced mixer designed for frequency upconversion and downconversion applications.[1][2] It operates over a wide RF and LO frequency range of 11 to 21 GHz and features a broad IF bandwidth from DC to 6 GHz.[1][2][3] Key characteristics of the CMD178 include low conversion loss, high port-to-port isolation, and a wide intermediate frequency (IF) bandwidth.[3] The passive, double-balanced topology contributes to its excellent performance characteristics.[2][3]

A thorough understanding of the mixer's electrical specifications is essential before beginning the PCB layout process.

© 2026 BenchChem. All rights reserved.

Quantitative Data Summary

The following tables summarize the key electrical specifications for the CMD178 and its packaged version, the CMD178C3. These parameters should inform the design and layout of the PCB to ensure the mixer operates within its specified limits.

Table 1: Key Electrical Specifications (CMD178/CMD178C3)

Parameter	Minimum	Typical	Maximum	Units
RF & LO Frequency Range	11	-	21	GHz
IF Frequency Range	DC	-	6	GHz
Conversion Loss	-	6	10	dB
LO to RF Isolation	31	45	-	dB
LO to IF Isolation	30	45	-	dB
RF to IF Isolation	15	26	-	dB
Input P1dB	-	9	-	dBm
Input IP3	-	16	-	dBm
LO Drive Level	+9	+13	-	dBm

Note: Values are typical unless otherwise specified. Performance can vary based on frequency, LO drive level, and matching circuitry. Data sourced from the CMD178 and CMD178C3 datasheets.[1][2][3]

Table 2: Absolute Maximum Ratings

© 2026 BenchChem. All rights reserved.

Parameter	Rating	Units
RF / IF Input Power	+22	dBm
LO Drive Power	+22	dBm
Operating Temperature	-40 to 85	°C
Storage Temperature	-55 to 150	°C

Exceeding these ratings may cause permanent damage to the device.[2][3]

PCB Layout Considerations

A well-designed PCB layout is crucial for maximizing the performance of the CMD178 mixer. The high operating frequencies necessitate careful attention to transmission line design, grounding, and component placement to minimize parasitic effects and maintain signal integrity.

RF, LO, and IF Port Matching

The RF, LO, and IF ports must be matched to a 50-ohm characteristic impedance to ensure maximum power transfer and minimize reflections.

- Transmission Lines: Utilize controlled impedance transmission lines, such as microstrip or coplanar waveguide (CPWG), for all RF, LO, and IF traces. The width of these lines should be calculated based on the dielectric constant and thickness of the PCB substrate.[4]
- Component Placement: Place matching components as close as possible to the mixer to minimize trace lengths and associated parasitic inductance and capacitance.

Grounding Scheme

A low-inductance ground plane is critical for providing a stable reference for the RF signals and ensuring high port-to-port isolation.

- Solid Ground Plane: A continuous, uninterrupted ground plane on a layer directly adjacent to the signal layer is highly recommended.[5] This provides a low-impedance return path for the RF currents.

© 2026 BenchChem. All rights reserved.

- Ground Vias: Populate the area around the mixer and its associated traces with numerous ground vias.[5] This helps to stitch the top and bottom ground planes together, minimizing ground inductance and preventing the propagation of spurious modes.

- Component Grounding: Ensure that all ground connections for bypass capacitors and other components are made directly to the main ground plane with short, wide traces or multiple vias.

Port-to-Port Isolation

Achieving the high isolation specifications of the CMD178 requires careful layout to prevent unwanted coupling between the RF, LO, and IF ports.

- Physical Separation: Maximize the physical distance between the traces for the RF, LO, and IF ports. Avoid running these traces parallel to each other for extended distances.

- Ground Shielding: Utilize ground planes and ground-filled areas to shield the different signal paths from each other. A grounded coplanar waveguide (GCPW) structure can provide excellent isolation.

- Crosstalk: Be mindful of potential crosstalk between signal layers. If traces must cross on different layers, ensure they are separated by a ground plane.

Power Supply Decoupling

While the CMD178 is a passive mixer and does not require a DC bias, any active components in the signal chain, such as amplifiers, will require a clean power supply.

- Bypass Capacitors: Use a combination of high-frequency (e.g., 100 pF) and low-frequency (e.g., 0.1 µF, 1 µF) bypass capacitors on all Vcc lines for any surrounding active components. Place the high-frequency capacitors as close as possible to the device's power pins.

- Dedicated Power Layers: Whenever possible, use dedicated power and ground layers to provide a low-impedance power delivery network.

Experimental Protocols

© 2026 BenchChem. All rights reserved.

To verify the performance of the CMD178 in a specific application, a series of measurements should be performed after assembly.

Conversion Loss Measurement

- Setup: Connect an RF signal generator to the RF port and a local oscillator (LO) signal generator to the LO port. Connect the IF port to a spectrum analyzer.
- Procedure:
  - Set the RF signal generator to the desired input frequency and power level (e.g., -10 dBm).
  - Set the LO signal generator to the desired frequency and a power level of +13 dBm.
  - Measure the power of the downconverted or upconverted signal at the IF port using the spectrum analyzer.
  - The conversion loss is the difference between the RF input power and the IF output power.

Port-to-Port Isolation Measurement

- Setup:
  - LO to RF Isolation: Connect an LO signal generator to the LO port and a spectrum analyzer to the RF port. Terminate the IF port with a 50-ohm load.
  - LO to IF Isolation: Connect an LO signal generator to the LO port and a spectrum analyzer to the IF port. Terminate the RF port with a 50-ohm load.
  - RF to IF Isolation: Connect an RF signal generator to the RF port and a spectrum analyzer to the IF port. Terminate the LO port with a 50-ohm load.
- Procedure:
  - Set the signal generator to the desired frequency and power level.
  - Measure the power of the leaked signal at the other port using the spectrum analyzer.

© 2026 BenchChem. All rights reserved.

- The isolation is the difference between the input power and the measured leaked power.

Visualizations

The following diagrams illustrate key concepts for the PCB layout of the CMD178 mixer.

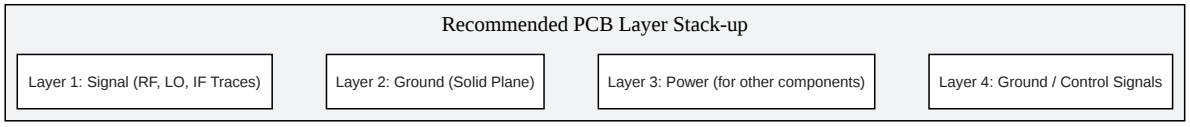

Click to download full resolution via product page

Caption: Recommended PCB Layer Stack-up.

© 2026 BenchChem. All rights reserved.

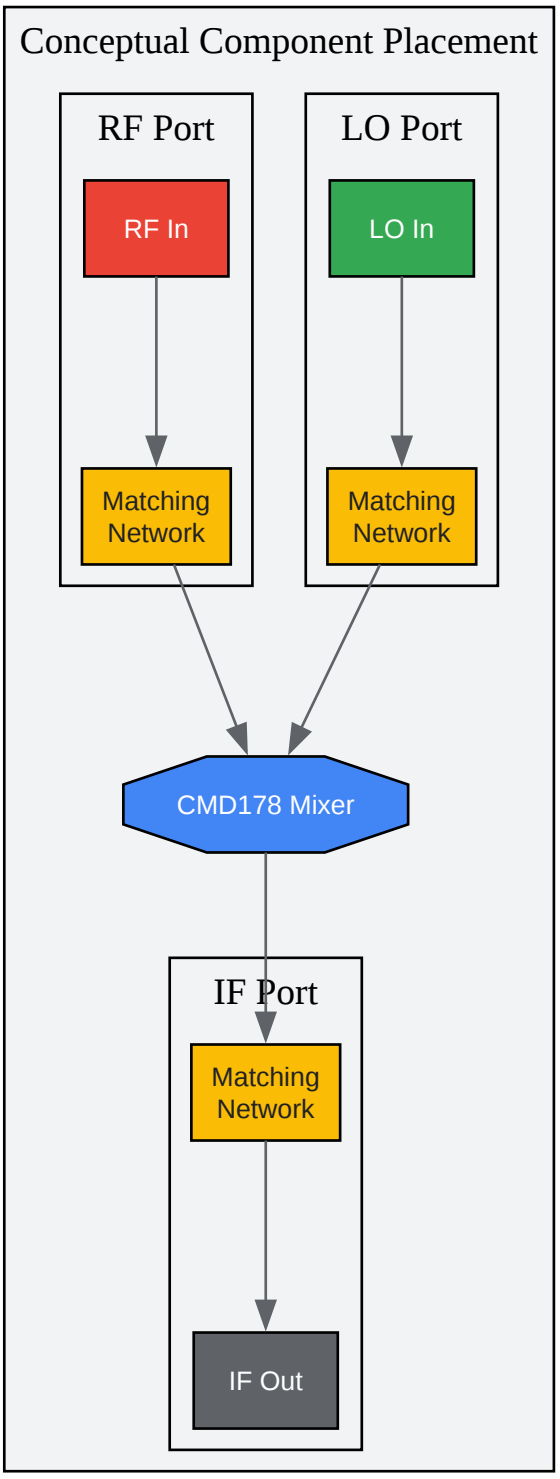

Click to download full resolution via product page

Caption: Conceptual Component Placement Diagram.

© 2026 BenchChem. All rights reserved.

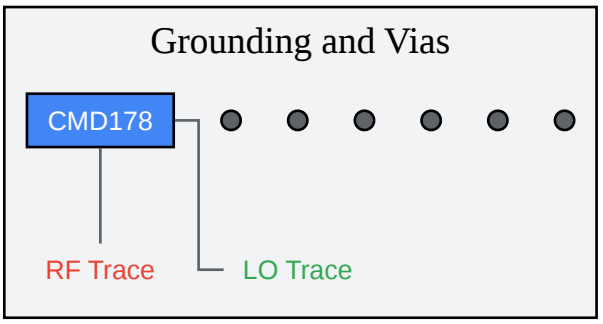

Ground vias surrounding the mixer and traces

Click to download full resolution via product page

Caption: Grounding Vias around the Mixer.

Need Custom Synthesis?

BenchChem offers custom synthesis for rare earth carbides and specific isotopiclabeling.

Email: info@benchchem.com or Request Quote Online.

References

- 1. CMD178 - Qorvo [qorvo.com]
- 2. Access to this page has been denied. [mouser.com]
- 3. qorvo.com [qorvo.com]
- 4. emhiser.com [emhiser.com]
- 5. edn.com [edn.com]
- To cite this document: BenchChem. [Application Notes and Protocols for PCB Layout of the CMD178 Mixer]. BenchChem, [2026]. [Online PDF]. Available at: [https://www.benchchem.com/product/b10825517/docs#application-notes-and-protocols-for-pcb-layout-of-the-cmd178-mixer]

Disclaimer & Data Validity:

© 2026 BenchChem. All rights reserved.

The information provided in this document is for Research Use Only (RUO) and is strictly not intended for diagnostic or therapeutic procedures. While BenchChem strives to provide accurate protocols, we make no warranties, express or implied, regarding the fitness of this product for every specific experimental setup.

Technical Support: The protocols provided are for reference purposes. Unsure if this reagent suits your experiment?

Need Industrial/Bulk Grade? Request Custom Synthesis Quote

BenchChem

Our mission is to be the trusted global source of essential and advanced chemicals, empowering scientists and researchers to drive progress in science and industry.

Contact

Address: 3281 E Guasti Rd

Ontario, CA 91761, United States

Phone: (601) 213-4426

Email: info@benchchem.com

Contact our Ph.D. Support Team for a compatibility check

© 2026 BenchChem. All rights reserved.