Application Notes and Protocols for In Vitro Studies of Psb-SB-487

Author: BenchChem Technical Support Team. **Date**: April 2026

Compound of Interest

Compound Name: *Psb-SB-487*

Cat. No.: *B10825302*

Get Quote

For Researchers, Scientists, and Drug Development Professionals

Introduction

Psb-SB-487 is a synthetic compound belonging to the coumarin class of molecules. It has been identified as a potent antagonist of the G protein-coupled receptor 55 (GPR55) and a partial agonist of the cannabinoid receptor type 2 (CB2).[1] It also exhibits weak antagonistic properties at the cannabinoid receptor type 1 (CB1).[1] Due to its activity on these receptors, which are implicated in a variety of physiological and pathological processes, **Psb-SB-487** holds potential as a valuable research tool for investigating conditions such as neuropathic pain, inflammation, cancer, and neurodegenerative diseases like Parkinson's disease.[1]

These application notes provide detailed protocols for the in vitro characterization of **Psb-SB-487**, enabling researchers to investigate its pharmacological properties and downstream signaling effects.

Data Presentation

The following table summarizes the reported in vitro pharmacological data for **Psb-SB-487**.

© 2026 BenchChem. All rights reserved.

Target Receptor	Assay Type	Parameter	Value (μM)	Cell Line	Reference
Human GPR55	β-arrestin recruitment	IC50	0.113	HEK293	[1]
Human CB1	Radioligand binding	Ki	1.170	CHO	[1]
Human CB2	Radioligand binding	Ki	0.292	CHO	

Signaling Pathways

Psb-SB-487 modulates the signaling of GPR55 and CB2 receptors. The diagrams below illustrate the key downstream pathways affected by the antagonism of GPR55 and the partial agonism of CB2.

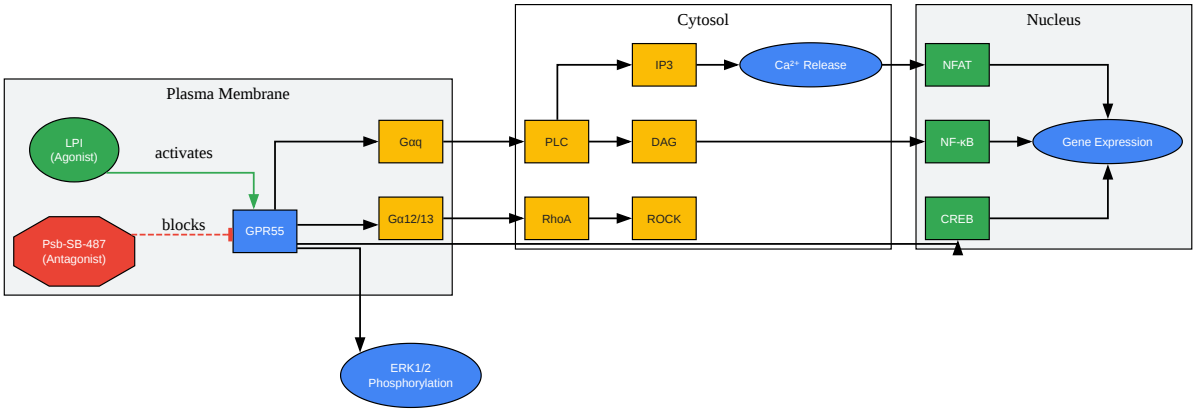

© 2026 BenchChem. All rights reserved.

Click to download full resolution via product page

Caption: GPR55 Antagonism by **Psb-SB-487**.

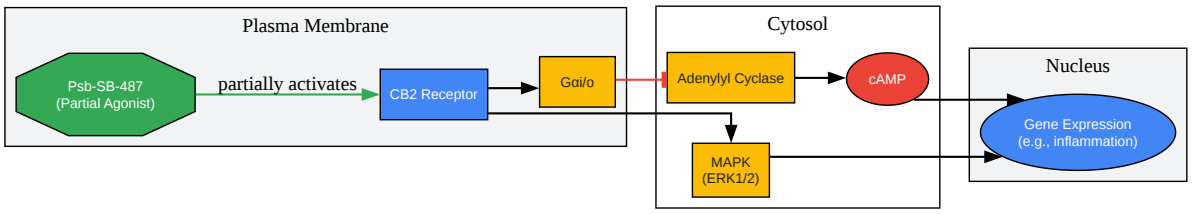

Click to download full resolution via product page

Caption: CB2 Partial Agonism by **Psb-SB-487**.

Experimental Protocols

The following are detailed protocols for key in vitro experiments to characterize the activity of **Psb-SB-487**.

GPR55 Antagonism: β-Arrestin Recruitment Assay

This assay determines the ability of **Psb-SB-487** to inhibit agonist-induced recruitment of β-arrestin to the GPR55 receptor.

© 2026 BenchChem. All rights reserved.

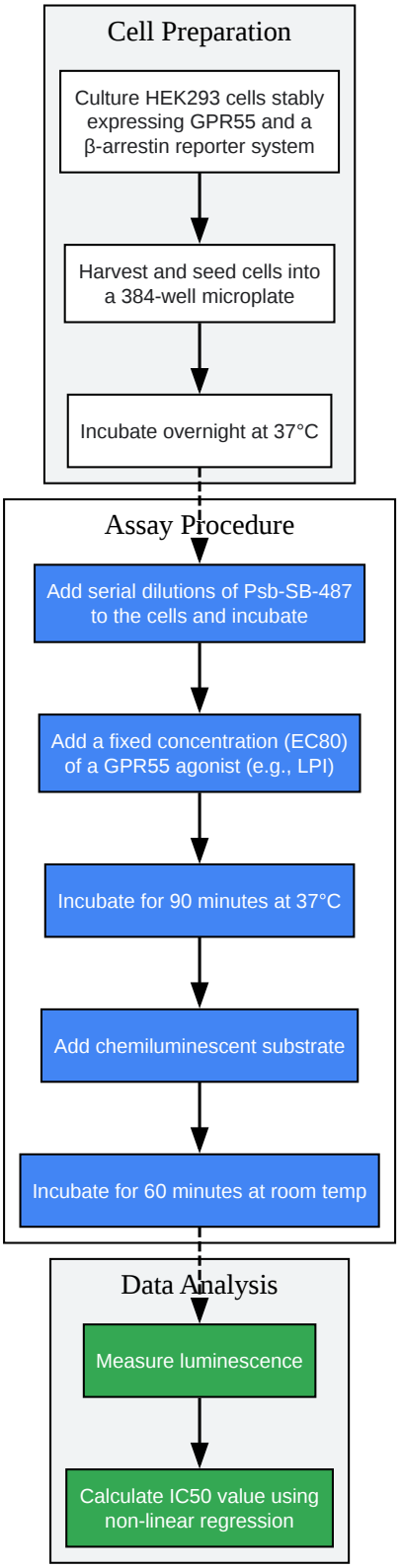

Click to download full resolution via product page

Caption: GPR55 β-Arrestin Assay Workflow.

© 2026 BenchChem. All rights reserved.

Methodology:

- Cell Culture:
  - Maintain HEK293 cells stably expressing human GPR55 and a β-arrestin reporter system (e.g., PathHunter® β-arrestin assay from DiscoveRx) in appropriate growth medium supplemented with selection antibiotics.
  - Culture cells at 37°C in a humidified atmosphere with 5% CO2.
- Cell Plating:
  - On the day before the assay, harvest cells and resuspend in assay medium.
  - Seed the cells into a 384-well white, clear-bottom microplate at a density of 5,000-10,000 cells per well.
  - Incubate the plate overnight at 37°C.
- Compound Preparation:
  - Prepare a stock solution of **Psb-SB-487** in DMSO.
  - Perform serial dilutions of **Psb-SB-487** in assay buffer to achieve the desired final concentrations.
  - Prepare a solution of a known GPR55 agonist (e.g., L-α-lysophosphatidylinositol - LPI) at a concentration that elicits an 80% maximal response (EC80).
- Assay Procedure:
  - Add the diluted **Psb-SB-487** solutions to the cell plate and incubate for 30 minutes at 37°C.
  - Add the GPR55 agonist (LPI) solution to all wells, except for the negative control wells.
  - Incubate the plate for 90 minutes at 37°C.

© 2026 BenchChem. All rights reserved.

- Allow the plate to equilibrate to room temperature.
- Add the chemiluminescent substrate according to the manufacturer's instructions.
- Incubate for 60 minutes at room temperature in the dark.

- Data Acquisition and Analysis:
  - Measure the luminescence signal using a plate reader.
  - Normalize the data to the positive (agonist only) and negative (vehicle only) controls.
  - Plot the normalized response against the logarithm of the **Psb-SB-487** concentration and fit the data using a four-parameter logistic equation to determine the IC50 value.

CB2 Partial Agonism: Radioligand Displacement Assay

This protocol determines the binding affinity (Ki) of **Psb-SB-487** for the human CB2 receptor.

© 2026 BenchChem. All rights reserved.

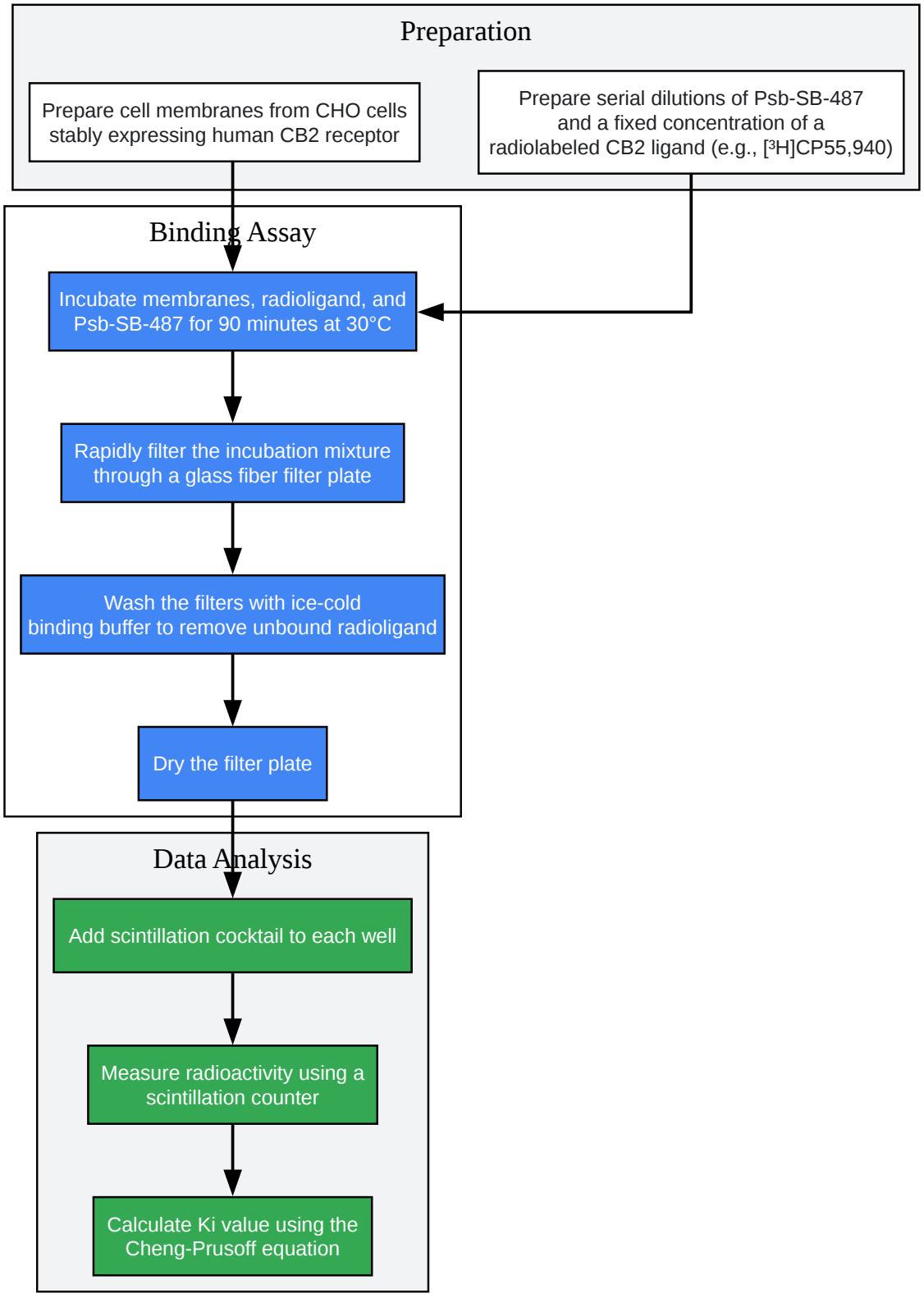

Click to download full resolution via product page

Caption: CB2 Radioligand Binding Assay Workflow.

© 2026 BenchChem. All rights reserved.

Methodology:

- Membrane Preparation:
  - Culture Chinese Hamster Ovary (CHO) cells stably expressing the human CB2 receptor.
  - Harvest the cells and homogenize in ice-cold buffer.
  - Centrifuge the homogenate at low speed to remove nuclei and debris.
  - Centrifuge the supernatant at high speed to pellet the cell membranes.
  - Resuspend the membrane pellet in a suitable buffer and determine the protein concentration.
- Binding Assay:
  - In a 96-well plate, combine the cell membranes, a fixed concentration of a high-affinity CB2 radioligand (e.g., [^{3}H]CP55,940), and varying concentrations of **Psb-SB-487**.
  - For total binding, omit the unlabeled ligand. For non-specific binding, include a saturating concentration of a known CB2 ligand.
  - Incubate the plate for 90 minutes at 30°C with gentle agitation.
- Filtration and Washing:
  - Rapidly terminate the binding reaction by filtering the contents of each well through a glass fiber filter plate using a cell harvester.
  - Wash the filters multiple times with ice-cold binding buffer to remove unbound radioligand.
- Data Acquisition and Analysis:
  - Dry the filter plate and add a scintillation cocktail to each well.
  - Measure the radioactivity in each well using a scintillation counter.

© 2026 BenchChem. All rights reserved.

- Calculate the specific binding by subtracting the non-specific binding from the total binding.
- Determine the IC50 value of **Psb-SB-487** by plotting the percentage of specific binding against the logarithm of the **Psb-SB-487** concentration.
- Calculate the Ki value using the Cheng-Prusoff equation: Ki = IC50 / (1 + [L]/Kd), where [L] is the concentration of the radioligand and Kd is its dissociation constant.

Downstream Signaling: ERK1/2 Phosphorylation Assay

This assay measures the effect of **Psb-SB-487** on the phosphorylation of ERK1/2, a downstream effector of both GPR55 and CB2 signaling.

Methodology:

- Cell Culture and Stimulation:
  - Seed cells expressing GPR55 or CB2 into a multi-well plate and culture until they reach the desired confluency.
  - Serum-starve the cells for a few hours before the experiment to reduce basal ERK1/2 phosphorylation.
  - To assess GPR55 antagonism, pre-incubate the cells with **Psb-SB-487** for 30 minutes, followed by stimulation with a GPR55 agonist (e.g., LPI) for 5-10 minutes.
  - To assess CB2 partial agonism, stimulate the cells with varying concentrations of **Psb-SB-487** for 5-10 minutes.
- Cell Lysis:
  - Aspirate the medium and wash the cells with ice-cold PBS.
  - Lyse the cells with a lysis buffer containing protease and phosphatase inhibitors.
  - Scrape the cells and collect the lysate.

© 2026 BenchChem. All rights reserved.

- Clarify the lysate by centrifugation.

- Western Blotting or ELISA:
  - Determine the protein concentration of the cell lysates.
  - Separate the proteins by SDS-PAGE and transfer them to a PVDF membrane (for Western blotting).
  - Alternatively, use a commercial ELISA kit for the detection of phosphorylated ERK1/2.
  - For Western blotting, probe the membrane with primary antibodies specific for phosphorylated ERK1/2 (p-ERK1/2) and total ERK1/2.
  - Use an appropriate HRP-conjugated secondary antibody and detect the signal using a chemiluminescent substrate.

- Data Analysis:
  - Quantify the band intensities from the Western blot or the absorbance from the ELISA.
  - Normalize the p-ERK1/2 signal to the total ERK1/2 signal.
  - For GPR55 antagonism, compare the p-ERK1/2 levels in the presence and absence of **Psb-SB-487**.
  - For CB2 partial agonism, plot the normalized p-ERK1/2 signal against the logarithm of the **Psb-SB-487** concentration to generate a dose-response curve and determine the EC50 value.

Need Custom Synthesis?

BenchChem offers custom synthesis for rare earth carbides and specific isotopiclabeling.

Email: info@benchchem.com or Request Quote Online.

References

- 1. The Displacement Binding Assay Using Human Cannabinoid CB2 Receptor-Transfected Cells - PubMed [pubmed.ncbi.nlm.nih.gov]
- To cite this document: BenchChem. [Application Notes and Protocols for In Vitro Studies of Psb-SB-487]. BenchChem, [2026]. [Online PDF]. Available at: [https://www.benchchem.com/product/b10825302/docs#application-notes-and-protocols-for-in-vitro-studies-of-psb-sb-487]

Disclaimer & Data Validity:

The information provided in this document is for Research Use Only (RUO) and is strictly not intended for diagnostic or therapeutic procedures. While BenchChem strives to provide accurate protocols, we make no warranties, express or implied, regarding the fitness of this product for every specific experimental setup.

Technical Support: The protocols provided are for reference purposes. Unsure if this reagent suits your experiment?

Need Industrial/Bulk Grade? Request Custom Synthesis Quote

BenchChem

Our mission is to be the trusted global source of essential and advanced chemicals, empowering scientists and researchers to drive progress in science and industry.

Contact

Address: 3281 E Guasti Rd

Ontario, CA 91761, United States

Phone: (601) 213-4426

Email: info@benchchem.com

Contact our Ph.D. Support Team for a compatibility check

© 2026 BenchChem. All rights reserved.