Application Notes: Remdesivir for Coronaviridae Research

Author: BenchChem Technical Support Team. **Date**: April 2026

Compound of Interest

Compound Name:	*Antiviral agent 43*
Cat. No.:	*B10820467*

Get Quote

Introduction

Remdesivir (GS-5734) is a broad-spectrum antiviral agent that has shown significant activity against a range of viruses, including the Coronaviridae family.[1] It is a phosphoramidate prodrug of a nucleoside analog designed to inhibit the viral RNA-dependent RNA polymerase (RdRp), an enzyme crucial for viral genome replication.[1] Originally developed for Hepatitis C and later tested against Ebola virus, its efficacy against coronaviruses like SARS-CoV and MERS-CoV led to its investigation and eventual authorization for treating COVID-19, the disease caused by SARS-CoV-2.[2] These notes provide detailed data and protocols for researchers studying the in vitro effects of Remdesivir on coronaviruses.

Mechanism of Action

Remdesivir is a prodrug that enters host cells and is metabolized into its active form, an adenosine triphosphate analog (GS-443902 triphosphate). This active metabolite acts as a direct-acting antiviral. It competes with the natural adenosine triphosphate (ATP) for incorporation into nascent viral RNA strands by the viral RdRp enzyme. Once incorporated, it leads to delayed chain termination, effectively halting the replication of the viral genome. This mechanism gives Remdesivir potent inhibitory effects on viral replication.

© 2026 BenchChem. All rights reserved.

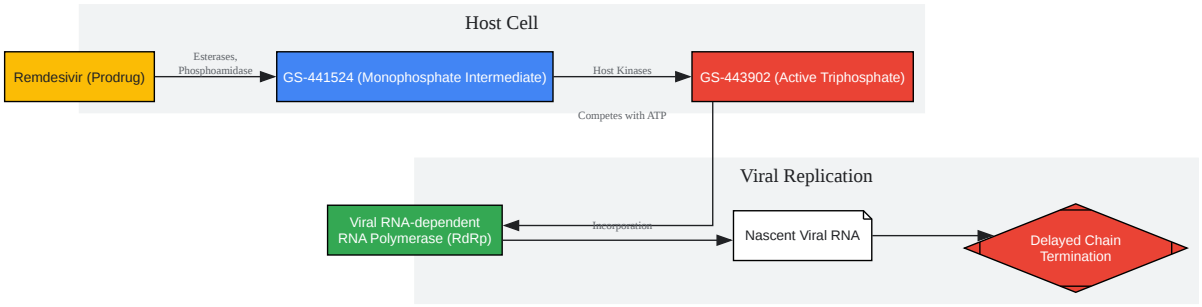

Click to download full resolution via product page

Mechanism of Action of Remdesivir.

Data Presentation

The antiviral activity of Remdesivir is typically quantified by its 50% effective concentration (EC50) or 50% inhibitory concentration (IC50), which represents the concentration of the drug that inhibits viral replication by 50%. The 50% cytotoxic concentration (CC50) is also determined to assess the drug's toxicity to the host cells. The ratio of CC50 to EC50 yields the selectivity index (SI), a measure of the drug's therapeutic window.

Table 1: In Vitro Efficacy and Cytotoxicity of Remdesivir against SARS-CoV-2

Cell Line	Virus Strain	Assay Method	EC50 / IC50 (μM)	CC50 (μM)	Selectivity Index (SI)	Reference
Vero E6	**SARS-CoV-2**	**Plaque Reduction**	**0.01**	**>10**	**>1000**	
Vero E6	SARS-CoV-2	TCID50	0.1	>10	>100	

© 2026 BenchChem. All rights reserved.

| Vero E6 | SARS-CoV-2 | qRT-PCR | <1 | >10 | >10 | |

Table 2: Summary of Clinical Efficacy Data for Remdesivir in COVID-19 Patients

Study Type	Patient Population	Key Finding	Outcome	Reference
Randomized Controlled Trial	**Hospitalized adults with COVID-19**	**Accelerated viral clearance by 42% compared to control.**	**Positive**	
Randomized Controlled Trial	Hospitalized adults with COVID-19	Significantly shorter time to recovery (10 days vs. 15 days for placebo).	Positive	
Randomized Controlled Trial	Hospitalized adults with COVID-19	Significantly lower median duration of hospital stay (10 days vs. 16 days).	Positive	

| Systematic Review & Meta-analysis | Hospitalized adults | Significantly increased survival across all disease severity levels. | Positive | |

Experimental Protocols

Detailed methodologies for assessing the antiviral efficacy of Remdesivir against Coronaviridae in vitro are provided below. Vero E6 cells are commonly used due to their high susceptibility to SARS-CoV-2 infection.

© 2026 BenchChem. All rights reserved.

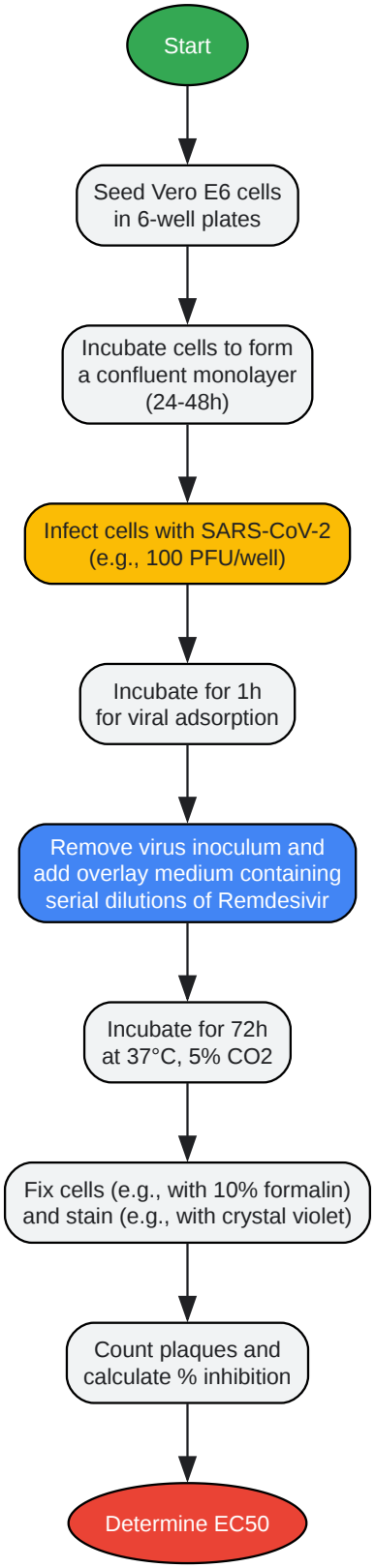

Click to download full resolution via product page

Workflow for an In Vitro Plaque Reduction Assay.

© 2026 BenchChem. All rights reserved.

Protocol 1: In Vitro Antiviral Activity by Plaque Reduction Assay

This assay measures the ability of a compound to inhibit the formation of viral plaques, which are localized areas of cell death caused by viral replication.

Materials:

- Vero E6 cells
- SARS-CoV-2 virus stock
- Dulbecco's Modified Eagle Medium (DMEM)
- Fetal Bovine Serum (FBS)
- Penicillin-Streptomycin solution
- Remdesivir stock solution
- Agarose or Avicel RC-591
- Formalin (10%)
- Crystal Violet staining solution (0.1%)
- 6-well cell culture plates

Procedure:

- Cell Seeding: Seed Vero E6 cells in 6-well plates at a density that will form a confluent monolayer within 24-48 hours.
- Cell Culture: Incubate the plates at 37°C with 5% CO2.
- Virus Infection: Once cells are confluent, remove the culture medium. Infect the cell monolayer with 100 plaque-forming units (PFU) of SARS-CoV-2 per well.

© 2026 BenchChem. All rights reserved.

- Adsorption: Incubate the plates for 1 hour at 37°C to allow for viral adsorption.
- Treatment Application: Prepare 2-fold or 10-fold serial dilutions of Remdesivir in an overlay medium (e.g., DMEM with 2% FBS and 1.2% Avicel or 0.6% agarose).
- Overlay: After the adsorption period, remove the virus inoculum and add 2 mL of the Remdesivir-containing overlay medium to each well. Also include a "virus control" (no drug) and "cell control" (no virus, no drug).
- Incubation: Incubate the plates at 37°C with 5% CO2 for 72 hours, or until plaques are visible in the virus control wells.
- Fixation and Staining:
  - Carefully remove the overlay medium.
  - Fix the cells by adding 1 mL of 10% formalin to each well and incubating for at least 30 minutes.
  - Remove the formalin and stain the cells with 0.1% crystal violet solution for 15-20 minutes.
  - Gently wash the wells with water and allow them to air dry.
- Data Analysis:
  - Count the number of plaques in each well.
  - Calculate the percentage of plaque reduction for each Remdesivir concentration relative to the virus control.
  - Determine the EC50 value by plotting the percentage of inhibition against the drug concentration using non-linear regression analysis.

Protocol 2: Quantification of Viral RNA by Real-Time RT-PCR (qRT-PCR)

This method quantifies the amount of viral RNA in a sample, providing a measure of viral replication. It is often used to assess the effect of an antiviral agent on viral load in cell culture

© 2026 BenchChem. All rights reserved.

supernatants.

Materials:

- Supernatant from infected and treated cell cultures (from Protocol 1 or a similar assay)
- RNA extraction kit (e.g., QIAamp Viral RNA Mini Kit)
- One-step RT-qPCR master mix
- Primers and probes specific to a conserved region of the coronavirus genome (e.g., N, M, or RdRP genes).
- RT-qPCR instrument
- Nuclease-free water
- In vitro transcribed RNA standards for absolute quantification

Procedure:

- Sample Collection: Collect the supernatant from virus-infected cells that have been treated with various concentrations of Remdesivir at a specific time point (e.g., 48 or 72 hours post-infection).
- RNA Extraction: Extract viral RNA from 100-200 µL of cell culture supernatant using a commercial viral RNA extraction kit according to the manufacturer's instructions. Elute the RNA in nuclease-free water.
- RT-qPCR Reaction Setup:
  - Prepare a reaction mixture containing the one-step RT-qPCR master mix, specific forward and reverse primers, and the probe.
  - In a 96-well PCR plate, add a specific volume of the extracted RNA to the reaction mixture.
  - Include a no-template control (NTC) using nuclease-free water instead of RNA.

© 2026 BenchChem. All rights reserved.

- Include a standard curve using serial dilutions of in vitro transcribed RNA with known copy numbers for absolute quantification.

- Thermocycling: Perform the RT-qPCR on a real-time PCR system with the following typical stages:
  - Reverse Transcription: e.g., 50°C for 10-15 minutes.
  - Taq Polymerase Activation: e.g., 95°C for 2-5 minutes.
  - PCR Amplification (40-45 cycles):
    - Denaturation: 95°C for 10-15 seconds.
    - Annealing/Extension: 60°C for 30-60 seconds (acquire fluorescence data at this step).

- Data Analysis:
  - The instrument's software will generate amplification plots and calculate the quantification cycle (Cq) or threshold cycle (Ct) value for each sample.
  - Generate a standard curve by plotting the Cq values of the standards against the logarithm of their known copy numbers.
  - Use the standard curve to determine the viral RNA copy number in each sample.
  - Calculate the percent reduction in viral RNA copies for each Remdesivir concentration compared to the untreated virus control.
  - Determine the EC50 value based on the reduction in viral RNA.

Need Custom Synthesis?

BenchChem offers custom synthesis for rare earth carbides and specific isotopiclabeling.

Email: info@benchchem.com or Request Quote Online.

References

- 1. benchchem.com [benchchem.com]
- 2. Remdesivir: A Review of Its Discovery and Development Leading to Emergency Use Authorization for Treatment of COVID-19 - PMC [pmc.ncbi.nlm.nih.gov]
- To cite this document: BenchChem. [Application Notes: Remdesivir for Coronaviridae Research]. BenchChem, [2026]. [Online PDF]. Available at: [https://www.benchchem.com/product/b10820467/docs#application-notes-remdesivir-for-coronaviridae-research]

Disclaimer & Data Validity:

The information provided in this document is for Research Use Only (RUO) and is strictly not intended for diagnostic or therapeutic procedures. While BenchChem strives to provide accurate protocols, we make no warranties, express or implied, regarding the fitness of this product for every specific experimental setup.

Technical Support: The protocols provided are for reference purposes. Unsure if this reagent suits your experiment?

Need Industrial/Bulk Grade? Request Custom Synthesis Quote

BenchChem

Our mission is to be the trusted global source of essential and advanced chemicals, empowering scientists and researchers to drive progress in science and industry.

Contact

Address: 3281 E Guasti Rd

Ontario, CA 91761, United States

Phone: (601) 213-4426

Email: info@benchchem.com

Contact our Ph.D. Support Team for a compatibility check

© 2026 BenchChem. All rights reserved.