Technical Guide: S-Ginsenoside Rg3-Mediated Ion Channel Regulation

Author: BenchChem Technical Support Team. **Date**: April 2026

Compound of Interest

Compound Name: *S-Ginsenoside Rg3*

Cat. No.: *B10818322*

Get Quote

Content Type: Technical Whitepaper Target Audience: Electrophysiologists, Medicinal Chemists, and Drug Discovery Scientists

Executive Summary: The Gating Modifier Paradigm

S-Ginsenoside Rg3 (20(S)-Rg3) represents a unique class of "gating modifiers" rather than simple pore blockers. Unlike non-selective saponins that disrupt membrane integrity, S-Rg3 exhibits high-affinity, stereoselective interactions with specific voltage-sensing domains (VSDs) and allosteric sites on ligand-gated receptors.

This guide delineates the mechanistic precision of S-Rg3, specifically its ability to inhibit excitability (via Na_v blockade and NMDA antagonism) while stabilizing repolarization (via hERG/KCNQ activation). This dual-action profile positions S-Rg3 as a scaffold for developing neuroprotective and anti-arrhythmic therapeutics.

Stereochemical Basis of Bioactivity

The biological activity of Ginsenoside Rg3 is dictated by the chirality at Carbon-20.[1]

© 2026 BenchChem. All rights reserved.

- 20(S)-Rg3 (Active): The hydroxyl group at C-20 is spatially oriented to allow tight hydrophobic packing near the chiral center. This alignment is critical for docking into the voltage-sensor clefts of ion channels.
- 20(R)-Rg3 (Inactive/Less Active): The epimer often fails to modulate voltage-gated channels (Nav, Cav, Kv) due to steric hindrance, though it retains some activity on ligand-gated channels (e.g., 5-HT3).

Critical Directive: In experimental design, utilizing a racemic mixture of Rg3 dilutes potency and introduces kinetic variability. Protocols must explicitly specify 20(S)-Rg3 (>98% purity).

Mechanisms of Action: Voltage-Gated Channels

Voltage-Gated Sodium Channels ($Na_v1.2$, $Na_v1.5$)

S-Rg3 acts as a state-dependent inhibitor, preferentially binding to the inactivated state of the channel.

- Mechanism: It interacts with the S4 voltage sensor of Domain II, specifically neutralizing the positive charge at residue K859. This interaction stabilizes the channel in a non-conducting state.
- Kinetic Effect:
  - Tonic Block: Reduces peak current amplitude.[2]
  - Use-Dependent Block: Inhibition increases with high-frequency stimulation (crucial for suppressing epileptic foci).
  - V1/2 Shift: Causes a depolarizing shift in the activation curve (requires stronger depolarization to open).

hERG Potassium Channels ($K_v11.1$)

Contrasting with most pharmaceutical compounds that block hERG (causing QT prolongation), S-Rg3 activates hERG and slows its deactivation.

- Mechanism: Interaction with residue Ser631 at the pore entryway.[3]

© 2026 BenchChem. All rights reserved.

- Kinetic Effect:
  - Increases tail current amplitude.
  - Decelerates deactivation (channel stays open longer during repolarization).
  - Therapeutic Outcome: Shortens Action Potential Duration (APD), offering protection against Early Afterdepolarizations (EADs).

Summary of Channel Modulation Data

Channel Family	Target Subtype	Effect	Molecular Target	Kinetic Outcome
Na_v	$Na_v1.2$ (Brain)	Inhibition	VSD Domain II (S4), K859	Use-dependent block; Depolarizing shift in activation.
Na_v	$Na_v1.5$ (Heart)	Inhibition	VSD Domain II	Reduced peak ; Anti-ischemic.
K_v	hERG ($K_v11.$ [4]1)	Activation	Pore Entryway (Ser631)	Slowed deactivation; Enhanced repolarization.
K_v	KCNQ1 ( )	Activation	K318, V319	Increased current amplitude.
K_v	$K_v1.4$	Inhibition	Unknown	Accelerated inactivation.

Pathway Visualization: Voltage-Gated Modulation

© 2026 BenchChem. All rights reserved.

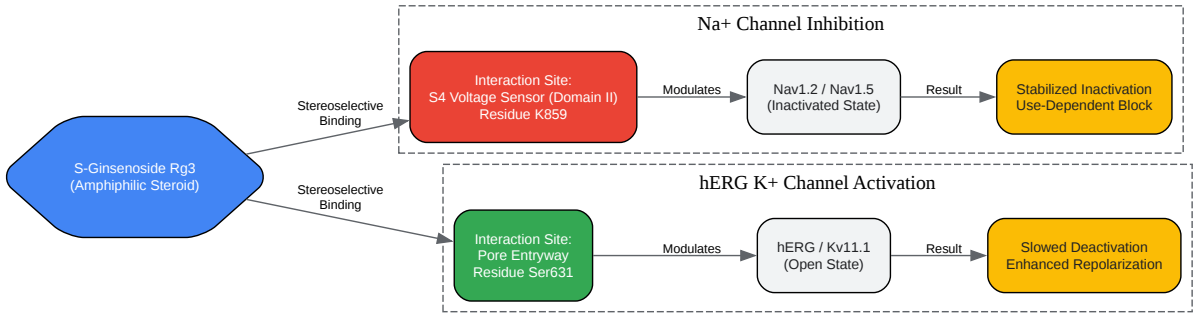

Click to download full resolution via product page

Figure 1: Dual-mechanism of S-Rg3 on excitable membranes. Note the distinct binding sites for Nav inhibition versus hERG activation.

Mechanisms of Action: Ligand-Gated Channels

NMDA Receptors (Neuroprotection)

S-Rg3 protects against glutamate-induced excitotoxicity.

- Mode: Competitive antagonism at the Glycine binding site (co-agonist site), not the glutamate site or the channel pore (unlike MK-801).
- Result: Reduces

  influx without complete channel blockade, preserving physiological signaling while preventing pathological overload.

GABA_A Receptors (Anxiolytic)

- Mode: Positive Allosteric Modulation (PAM).
- Target: Requires the

© 2026 BenchChem. All rights reserved.

subunit.[5]

- Result: Increases chloride influx, hyperpolarizing the neuron.

Experimental Methodology & Protocols

Solubility and Stock Preparation (Critical Step)

Ginsenosides are hydrophobic and prone to precipitation in aqueous buffers. Improper preparation leads to silent data artifacts.

- Stock Solution: Dissolve S-Rg3 powder in 100% DMSO to a concentration of 10–50 mM. Vortex for 1 minute.
- Storage: Aliquot and store at -20°C. Avoid repeated freeze-thaw cycles.
- Working Solution (Perfusion):
  - Dilute stock into extracellular recording solution immediately before use.
  - Max DMSO: Final concentration must be ≤ 0.05% (v/v).
  - Sonication: Sonicate the working solution for 5 minutes to ensure dispersion.
  - Glassware: Use silanized glass or low-binding plastic tubing to prevent Rg3 adsorption to the perfusion system.

Whole-Cell Patch Clamp Protocol (Nav1.2 Example)

Objective: Measure tonic and use-dependent inhibition.

- Setup: Whole-cell configuration on HEK293 cells expressing Nav1.2.
- Solutions:
  - Pipette (Intracellular): CsF-based solution (to block K+ currents).
  - Bath (Extracellular): Standard Tyrode’s solution.
- Voltage Protocol (Tonic Block):

© 2026 BenchChem. All rights reserved.

- Holding Potential: -100 mV.
- Depolarizing Step: -10 mV for 50 ms.
- Interval: 10 seconds (low frequency).

- Voltage Protocol (Use-Dependence):
  - Train of 20 pulses to -10 mV at 10 Hz and 20 Hz.
  - Measure the reduction in peak current from Pulse 1 to Pulse 20.
- Washout: S-Rg3 effects are reversible but slow. Wash with Rg3-free buffer for >5 minutes.

Experimental Workflow Visualization

© 2026 BenchChem. All rights reserved.

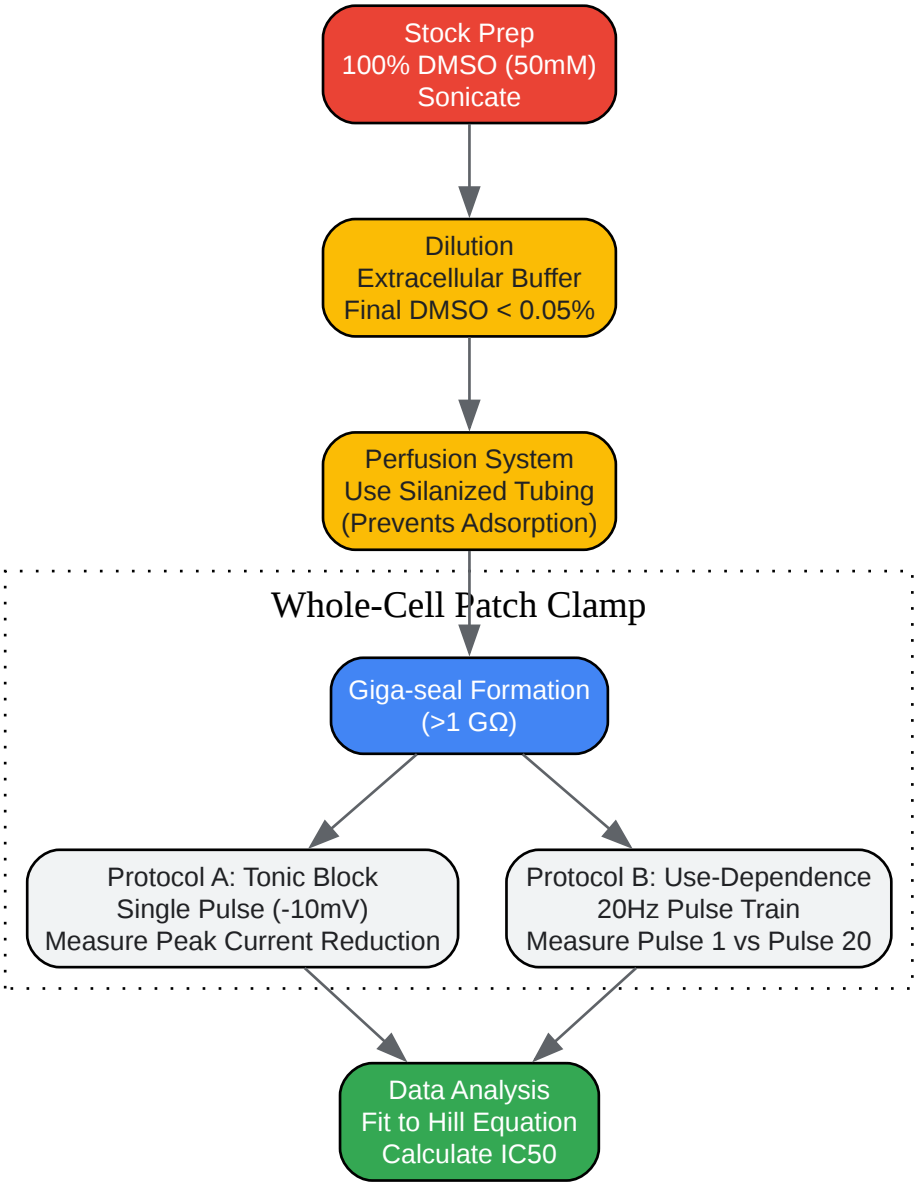

Click to download full resolution via product page

Figure 2: Validated workflow for assessing S-Rg3 electrophysiological effects. Note the emphasis on low DMSO and specialized tubing.

References

- Kang, D. I., et al. (2005). Evidence that the tertiary structure of 20(S)-ginsenoside Rg3 with tight hydrophobic packing near the chiral center is important for Na+ channel regulation.[6] Biochemical and Biophysical Research Communications.

© 2026 BenchChem. All rights reserved.

- Choi, S. H., et al. (2011).[4][7] Ginsenoside Rg3 decelerates hERG K+ channel deactivation through Ser631 residue interaction.[3] European Journal of Pharmacology.
- Lee, J. H., et al. (2005).[2] Characteristics of ginsenoside Rg3-mediated brain Na+ current inhibition. Molecular Pharmacology.
- Kim, S., et al. (2004). Ginsenoside Rg3 antagonizes NMDA receptors through a glycine modulatory site in rat cultured hippocampal neurons.[8] Biochemical and Biophysical Research Communications.
- Jeong, S. M., et al. (2004). Stereospecificity of ginsenoside Rg3 action on ion channels.[9][10] Biological and Pharmaceutical Bulletin.
- Lee, B. H., et al. (2013).[5] Ginsenoside Rg3 regulates GABAA receptor channel activity: involvement of interaction with the γ2 subunit. European Journal of Pharmacology.

Need Custom Synthesis?

BenchChem offers custom synthesis for rare earth carbides and specific isotopiclabeling.

Email: info@benchchem.com or Request Quote Online.

Sources

- 1. Unveiling the experimental proof of the anticancer potential of ginsenoside Rg3 (Review) - PMC [pmc.ncbi.nlm.nih.gov]
- 2. pure.skku.edu [pure.skku.edu]
- 3. ovid.com [ovid.com]
- 4. Ginsenoside Rg3, a Gating Modifier of EAG Family K+ Channels - PMC [pmc.ncbi.nlm.nih.gov]
- 5. 20S-Ginsenoside Rg3 - LKT Labs [lktlabs.com]
- 6. Evidence that the tertiary structure of 20(S)-ginsenoside Rg(3) with tight hydrophobic packing near the chiral center is important for Na(+) channel regulation - PubMed [pubmed.ncbi.nlm.nih.gov]
- 7. Ginsenoside Rg(3) decelerates hERG K(+) channel deactivation through Ser631 residue interaction - PubMed [pubmed.ncbi.nlm.nih.gov]

© 2026 BenchChem. All rights reserved.

- 8. Ginsenoside Rg3 antagonizes NMDA receptors through a glycine modulatory site in rat cultured hippocampal neurons - PubMed [pubmed.ncbi.nlm.nih.gov]
- 9. Modifications of aliphatic side chain of 20(S)-ginsenoside RG3 cause an enhancement or loss of brain Na+ channel current inhibitions - PubMed [pubmed.ncbi.nlm.nih.gov]
- 10. researchgate.net [researchgate.net]
- To cite this document: BenchChem. [Technical Guide: S-Ginsenoside Rg3-Mediated Ion Channel Regulation]. BenchChem, [2026]. [Online PDF]. Available at: [https://www.benchchem.com/product/b10818322/docs#technical-guide-s-ginsenoside-rg3-mediated-ion-channel-regulation]

Disclaimer & Data Validity:

The information provided in this document is for Research Use Only (RUO) and is strictly not intended for diagnostic or therapeutic procedures. While BenchChem strives to provide accurate protocols, we make no warranties, express or implied, regarding the fitness of this product for every specific experimental setup.

Technical Support: The protocols provided are for reference purposes. Unsure if this reagent suits your experiment?

Need Industrial/Bulk Grade? Request Custom Synthesis Quote

BenchChem

Our mission is to be the trusted global source of essential and advanced chemicals, empowering scientists and researchers to drive progress in science and industry.

Contact

Address: 3281 E Guasti Rd

Ontario, CA 91761, United States

Phone: (601) 213-4426

Email: info@benchchem.com

© 2026 BenchChem. All rights reserved.

Contact our Ph.D. Support Team for a compatibility check

© 2026 BenchChem. All rights reserved.