# Application Notes for Nrf2-Activator-12G in Organoid Models

**Author**: BenchChem Technical Support Team. **Date**: April 2026

***Compound of Interest***

| | |
|---|---|
| *Compound Name:* | *Nrf2-Activator-12G* |
| *Cat. No.:* | *B10814901* |

*Get Quote*

Introduction

Nuclear factor erythroid 2-related factor 2 (Nrf2) is a critical transcription factor that orchestrates cellular defense mechanisms against oxidative and electrophilic stress.[1][2][3] The Nrf2-Keap1 signaling pathway is a key regulator of cellular redox homeostasis, and its activation leads to the transcription of a wide array of cytoprotective genes.[4][5] In the context of organoid models, which are three-dimensional, self-organizing structures that recapitulate the architecture and function of native organs, the modulation of the Nrf2 pathway presents a promising avenue for studying disease pathogenesis and for the development of novel therapeutic strategies.

**Nrf2-Activator-12G** is a potent and selective small molecule activator of the Nrf2 signaling pathway. It functions by disrupting the interaction between Nrf2 and its cytosolic repressor, Kelch-like ECH-associated protein 1 (Keap1), leading to the nuclear translocation of Nrf2 and subsequent activation of antioxidant response element (ARE)-driven gene expression. These application notes provide a comprehensive overview of the use of **Nrf2-Activator-12G** in various organoid models, including protocols for treatment and downstream analysis.

Mechanism of Action

© 2026 BenchChem. All rights reserved.

Under basal conditions, Keap1 targets Nrf2 for ubiquitination and subsequent proteasomal degradation. **Nrf2-Activator-12G**, an electrophilic compound, is proposed to react with specific cysteine residues on Keap1. This covalent modification induces a conformational change in Keap1, thereby liberating Nrf2 from its inhibitory grasp. The stabilized Nrf2 then translocates to the nucleus, where it heterodimerizes with small Maf proteins and binds to the ARE sequences in the promoter regions of its target genes. This leads to the upregulation of a battery of protective enzymes, including NAD(P)H:quinone oxidoreductase 1 (NQO1), heme oxygenase-1 (HO-1), and glutamate-cysteine ligase (GCL), which collectively enhance the antioxidant capacity of the cells within the organoid.

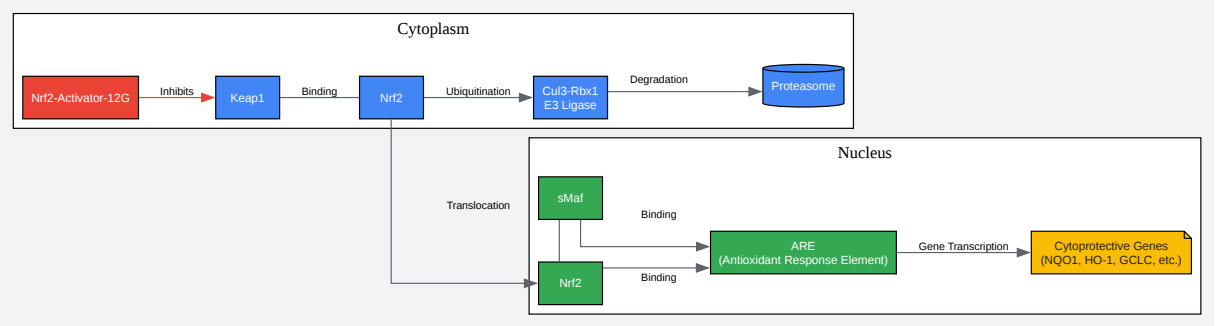


Click to download full resolution via product page

Caption: Nrf2 signaling pathway activation by **Nrf2-Activator-12G**.

Applications in Organoid Models

The application of **Nrf2-Activator-12G** in organoid models spans various research areas:

- Disease Modeling: In organoids derived from patients with inflammatory bowel disease (IBD) or chronic obstructive pulmonary disease (COPD), **Nrf2-Activator-12G** can be used to

© 2026 BenchChem. All rights reserved.

investigate the role of oxidative stress in disease progression and to assess the therapeutic potential of Nrf2 activation in mitigating inflammation and tissue damage.

- Cancer Research: The role of Nrf2 in cancer is context-dependent. While Nrf2 activation can protect normal cells from carcinogens, its persistent activation in established tumors can promote cancer cell proliferation and chemoresistance. **Nrf2-Activator-12G** can be utilized in tumor organoids to study the effects of Nrf2 activation on tumor growth, metastasis, and sensitivity to chemotherapeutic agents. For instance, studies have shown that Nrf2 activators can enhance the cytotoxic effect of standard chemotherapy drugs on colorectal cancer organoids.

- Toxicology and Drug Screening: Organoids, particularly liver and intestinal organoids, serve as excellent models for toxicological studies. **Nrf2-Activator-12G** can be used as a positive control to evaluate the cytoprotective effects of novel compounds against drug-induced oxidative stress.

- Developmental Biology: The Nrf2 pathway is implicated in developmental processes. The use of **Nrf2-Activator-12G** in organoid models of developing tissues can help elucidate the role of redox signaling in organogenesis.

# Experimental Protocols

General Considerations

- Organoid Culture: The protocols provided are generalized. Specific culture conditions, including media composition and passage frequency, should be optimized for the specific type of organoid being used. A comprehensive protocol for the generation and culture of patient-derived colorectal organoids can be found in the work of Plattner et al. (2023).

- Reagent Preparation: Prepare all media, buffers, and digestion mixes in a sterile cell culture hood. **Nrf2-Activator-12G** should be dissolved in a suitable solvent (e.g., DMSO) to prepare a stock solution, which can be further diluted in culture medium to the desired working concentration.

- Controls: Appropriate vehicle controls (e.g., DMSO) should be included in all experiments.

Protocol 1: Treatment of Established Organoids with **Nrf2-Activator-12G**

© 2026 BenchChem. All rights reserved.

This protocol describes the treatment of pre-established organoids with **Nrf2-Activator-12G** to assess its effects on Nrf2 pathway activation and downstream cellular responses.

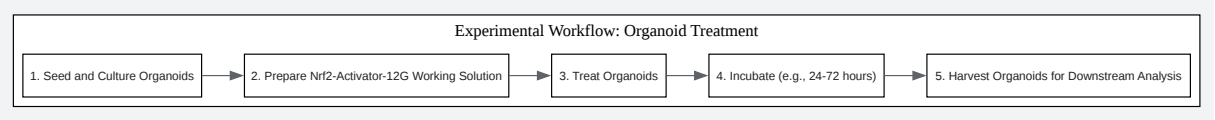


Click to download full resolution via product page

Caption: Workflow for treating established organoids.

Materials:

- Established organoid cultures in Matrigel domes
- Complete organoid culture medium
- **Nrf2-Activator-12G** stock solution (e.g., 10 mM in DMSO)
- Phosphate-buffered saline (PBS)
- Cell recovery solution (e.g., Corning Cell Recovery Solution)

Procedure:

- Organoid Culture: Culture organoids to the desired size and density according to standard protocols.
- Preparation of Treatment Medium: Prepare fresh complete organoid culture medium containing the desired final concentration of **Nrf2-Activator-12G** (e.g., 1-10 µM). Include a vehicle control medium with the same concentration of DMSO.
- Treatment: Carefully remove the culture medium from the organoid-containing wells. Add the prepared treatment or vehicle control medium to the wells.

© 2026 BenchChem. All rights reserved.

- Incubation: Incubate the organoids for the desired duration (e.g., 24, 48, or 72 hours) at 37°C and 5% CO2.
- Harvesting:
  - Aspirate the medium.
  - Add cold cell recovery solution to depolymerize the Matrigel.
  - Incubate on ice for 30-60 minutes.
  - Collect the organoids by centrifugation.
  - Wash the organoid pellet with cold PBS.
  - The harvested organoids are now ready for downstream analysis (e.g., qPCR, Western blotting, viability assays).

Protocol 2: Downstream Analysis of Nrf2 Activation

A. Quantitative Real-Time PCR (qPCR) for Nrf2 Target Gene Expression

Materials:

- Harvested organoid pellets
- RNA extraction kit (e.g., RNeasy Mini Kit, Qiagen)
- cDNA synthesis kit (e.g., iScript cDNA Synthesis Kit, Bio-Rad)
- qPCR master mix (e.g., SsoAdvanced Universal SYBR Green Supermix, Bio-Rad)
- Primers for Nrf2 target genes (e.g., NQO1, HMOX1, GCLC) and a housekeeping gene (e.g., ACTB, GAPDH)

Procedure:

- RNA Extraction: Extract total RNA from the organoid pellets according to the manufacturer's instructions.

© 2026 BenchChem. All rights reserved.

- cDNA Synthesis: Synthesize cDNA from the extracted RNA.
- qPCR: Perform qPCR using the synthesized cDNA, primers, and qPCR master mix.
- Data Analysis: Calculate the relative gene expression using the ΔΔCt method, normalizing to the housekeeping gene and comparing the treated samples to the vehicle control.

B. Western Blotting for Nrf2 and Target Protein Expression

Materials:

- Harvested organoid pellets
- RIPA buffer with protease and phosphatase inhibitors
- BCA protein assay kit
- SDS-PAGE gels and running buffer
- Transfer buffer and PVDF membrane
- Blocking buffer (e.g., 5% non-fat milk or BSA in TBST)
- Primary antibodies (e.g., anti-Nrf2, anti-NQO1, anti-HO-1, anti-β-actin)
- HRP-conjugated secondary antibodies
- Chemiluminescent substrate

Procedure:

- Protein Extraction: Lyse the organoid pellets in RIPA buffer.
- Protein Quantification: Determine the protein concentration using a BCA assay.
- SDS-PAGE and Transfer: Separate the protein lysates by SDS-PAGE and transfer them to a PVDF membrane.

© 2026 BenchChem. All rights reserved.

- Immunoblotting: Block the membrane and incubate with primary antibodies, followed by incubation with HRP-conjugated secondary antibodies.
- Detection: Visualize the protein bands using a chemiluminescent substrate and an imaging system.

C. Organoid Viability and Growth Assays

Materials:

- Organoid cultures treated as in Protocol 1
- Cell viability reagent (e.g., CellTiter-Glo 3D, Promega)
- Brightfield microscope with imaging software

Procedure for Viability Assay:

- Equilibrate the organoid plates and the viability reagent to room temperature.
- Add the viability reagent to each well according to the manufacturer's instructions.
- Mix by orbital shaking and incubate at room temperature.
- Measure the luminescence using a plate reader.

Procedure for Growth Assessment:

- Acquire brightfield images of the organoids at different time points during the treatment.
- Use image analysis software (e.g., ImageJ) to quantify the organoid size and number.

# Data Presentation

Table 1: Effect of **Nrf2-Activator-12G** on Nrf2 Target Gene Expression in Colon Organoids

© 2026 BenchChem. All rights reserved.

| Treatment | NQO1 Fold Change (mRNA) | HMOX1 Fold Change (mRNA) | GCLC Fold Change (mRNA) |
|---|---|---|---|
| Vehicle (DMSO) | 1.0 ± 0.1 | 1.0 ± 0.2 | 1.0 ± 0.1 |
| Nrf2-Activator-12G (1 µM) | 3.5 ± 0.4 | 4.2 ± 0.5 | 2.8 ± 0.3 |
| Nrf2-Activator-12G (5 µM) | 8.1 ± 0.9 | 9.5 ± 1.1 | 6.7 ± 0.8 |
| Nrf2-Activator-12G (10 µM) | 15.2 ± 1.5 | 18.3 ± 2.0 | 12.4 ± 1.3 |

Data are presented as mean ± standard deviation from three independent experiments.

Table 2: Effect of **Nrf2-Activator-12G** on Protein Expression in Pancreatic Organoids

| Treatment | Nrf2 (nuclear) Fold Change | NQO1 Fold Change | HO-1 Fold Change |
|---|---|---|---|
| Vehicle (DMSO) | 1.0 ± 0.2 | 1.0 ± 0.3 | 1.0 ± 0.2 |
| Nrf2-Activator-12G (5 µM) | 4.8 ± 0.6 | 3.9 ± 0.5 | 5.1 ± 0.7 |

Data are presented as mean fold change relative to vehicle control, normalized to a loading control (e.g., Lamin B1 for nuclear Nrf2, β-actin for total protein). Data are from three independent experiments.

Table 3: Effect of **Nrf2-Activator-12G** on the Viability of Intestinal Organoids under Oxidative Stress

© 2026 BenchChem. All rights reserved.

| Treatment | Oxidative Stressor | Relative Viability (%) |
|---|---|---|
| Vehicle (DMSO) | - | 100 ± 5 |
| Vehicle (DMSO) | + (e.g., H2O2) | 45 ± 7 |
| Nrf2-Activator-12G (5 µM) | - | 98 ± 6 |
| Nrf2-Activator-12G (5 µM) | + (e.g., H2O2) | 85 ± 9 |

Data are presented as mean ± standard deviation from three independent experiments. Viability is normalized to the untreated control.

These tables provide a clear and structured summary of the quantitative data that can be generated using the described protocols, allowing for easy comparison of the effects of **Nrf2-Activator-12G** at different concentrations and under different conditions.

***Need Custom Synthesis?***

*BenchChem offers custom synthesis for rare earth carbides and specific isotopiclabeling.*

*Email: info@benchchem.com or Request Quote Online.*

# References

- 1. What are Nrf2 modulators and how do they work? [synapse.patsnap.com]
- 2. integrativepharmacology.com [integrativepharmacology.com]
- 3. medium.com [medium.com]
- 4. Regulation of Nrf2/ARE Pathway by Dietary Flavonoids: A Friend or Foe for Cancer Management? - PMC [pmc.ncbi.nlm.nih.gov]
- 5. mdpi.com [mdpi.com]
- To cite this document: BenchChem. [Application Notes for Nrf2-Activator-12G in Organoid Models]. BenchChem, [2026]. [Online PDF]. Available at: [https://www.benchchem.com/product/b10814901/docs#application-notes-for-nrf2-activator-12g-in-organoid-models]

© 2026 BenchChem. All rights reserved.

**Disclaimer & Data Validity:**

The information provided in this document is for Research Use Only (RUO) and is strictly not intended for diagnostic or therapeutic procedures. While BenchChem strives to provide accurate protocols, we make no warranties, express or implied, regarding the fitness of this product for every specific experimental setup.

**Technical Support:**The protocols provided are for reference purposes. Unsure if this reagent suits your experiment?

**Need Industrial/Bulk Grade?** Request Custom Synthesis Quote

# BenchChem

Our mission is to be the trusted global source of essential and advanced chemicals, empowering scientists and researchers to drive progress in science and industry.

Contact

Address: 3281 E Guasti Rd

Ontario, CA 91761, United States

Phone: (601) 213-4426

Email: info@benchchem.com

Contact our Ph.D. Support Team for a compatibility check

© 2026 BenchChem. All rights reserved.