How to prevent ZINC69391 degradation during storage

Author: BenchChem Technical Support Team. **Date**: April 2026

Compound of Interest

Compound Name:	*ZINC69391*
Cat. No.:	*B10811055*

Get Quote

Technical Support Center: ZINC69391

This technical support center provides researchers, scientists, and drug development professionals with comprehensive guidance on the proper storage and handling of **ZINC69391** to prevent its degradation. Below you will find frequently asked questions (FAQs) and troubleshooting guides to address common issues encountered during experimentation.

Frequently Asked Questions (FAQs)

Q1: What are the recommended storage conditions for **ZINC69391**?

A1: The stability of **ZINC69391** is highly dependent on the storage conditions. Adherence to these recommendations is critical to ensure the compound's integrity over time.

Data Presentation: Recommended Storage Conditions for **ZINC69391**

© 2026 BenchChem. All rights reserved.

Form	Storage Temperature	Duration
Powder	-20°C	3 years
4°C	2 years	
In Solvent	-80°C	6 months
-20°C	1 month	

Q2: What solvents are suitable for dissolving **ZINC69391**?

A2: **ZINC69391** is soluble in DMSO (≥10 mg/ml) and sparingly soluble in ethanol (1-10 mg/ml). For creating stock solutions, DMSO is the recommended solvent. Ensure the DMSO is anhydrous, as moisture can contribute to degradation.

Q3: How can I assess the stability of my **ZINC69391** sample?

A3: The most reliable method to assess the stability of your **ZINC69391** sample is through analytical techniques such as High-Performance Liquid Chromatography (HPLC). A stability-indicating HPLC method can separate the intact **ZINC69391** from its degradation products, allowing for accurate quantification of the compound's purity.

Q4: What are the likely degradation pathways for **ZINC69391**?

A4: While specific degradation pathways for **ZINC69391** have not been extensively published, based on its chemical structure containing guanidine, trifluoromethylphenyl, and pyrimidine moieties, potential degradation pathways under stress conditions include:

- Hydrolysis: The guanidine group and the pyrimidine ring can be susceptible to hydrolysis under acidic or basic conditions.
- Oxidation: The molecule may be susceptible to oxidation, particularly if exposed to air and light over extended periods.
- Photodegradation: The pyrimidine ring and other aromatic components can be sensitive to UV light, leading to photochemical degradation.

© 2026 BenchChem. All rights reserved.

The following diagram illustrates the potential areas of susceptibility to degradation on the **ZINC69391** molecule.

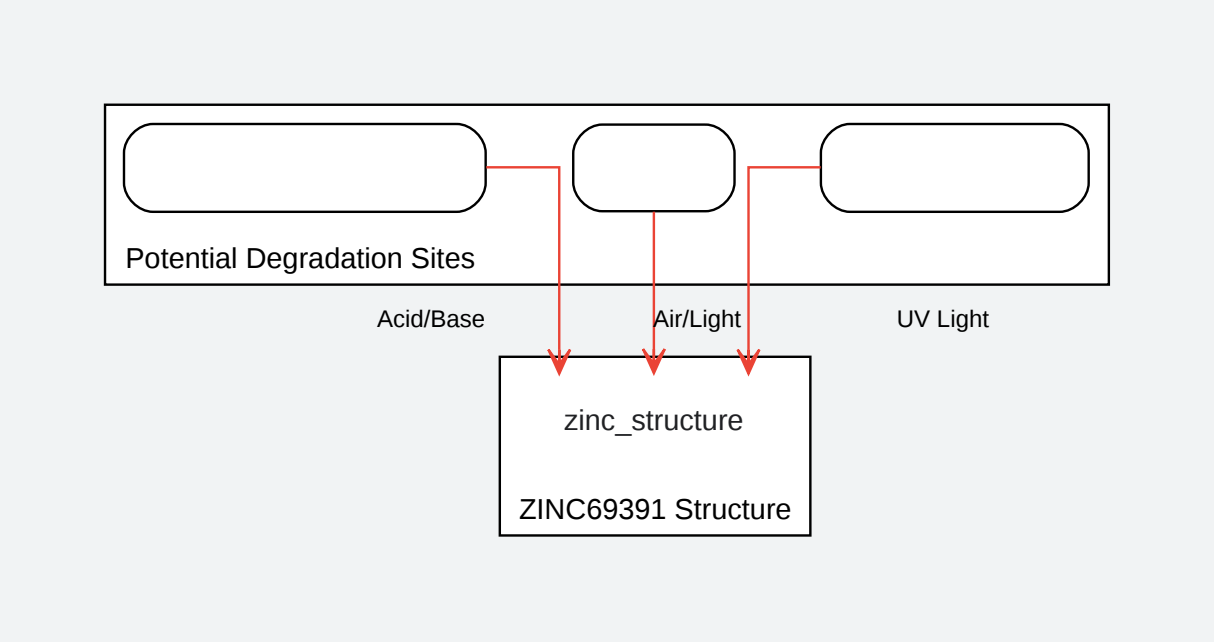

Click to download full resolution via product page

Caption: Potential degradation sites on the **ZINC69391** molecule.

Troubleshooting Guides

Issue 1: Loss of Compound Activity in Biological Assays

If you observe a decrease or complete loss of the expected biological activity of **ZINC69391** in your experiments, it may be due to compound degradation.

Troubleshooting Steps:

- Verify Storage Conditions: Confirm that the compound has been stored according to the recommended temperature and duration guidelines.
- Prepare Fresh Solutions: If using a stock solution that is approaching the end of its recommended storage period, prepare a fresh solution from a new vial of powdered **ZINC69391**.

© 2026 BenchChem. All rights reserved.

- Assess Purity: If possible, analyze the purity of your compound using HPLC to check for the presence of degradation products.
- Control for Solvent Effects: Ensure that the final concentration of the solvent (e.g., DMSO) in your assay is not causing cellular toxicity or interfering with the assay itself.

Logical Relationship: Troubleshooting Loss of Activity

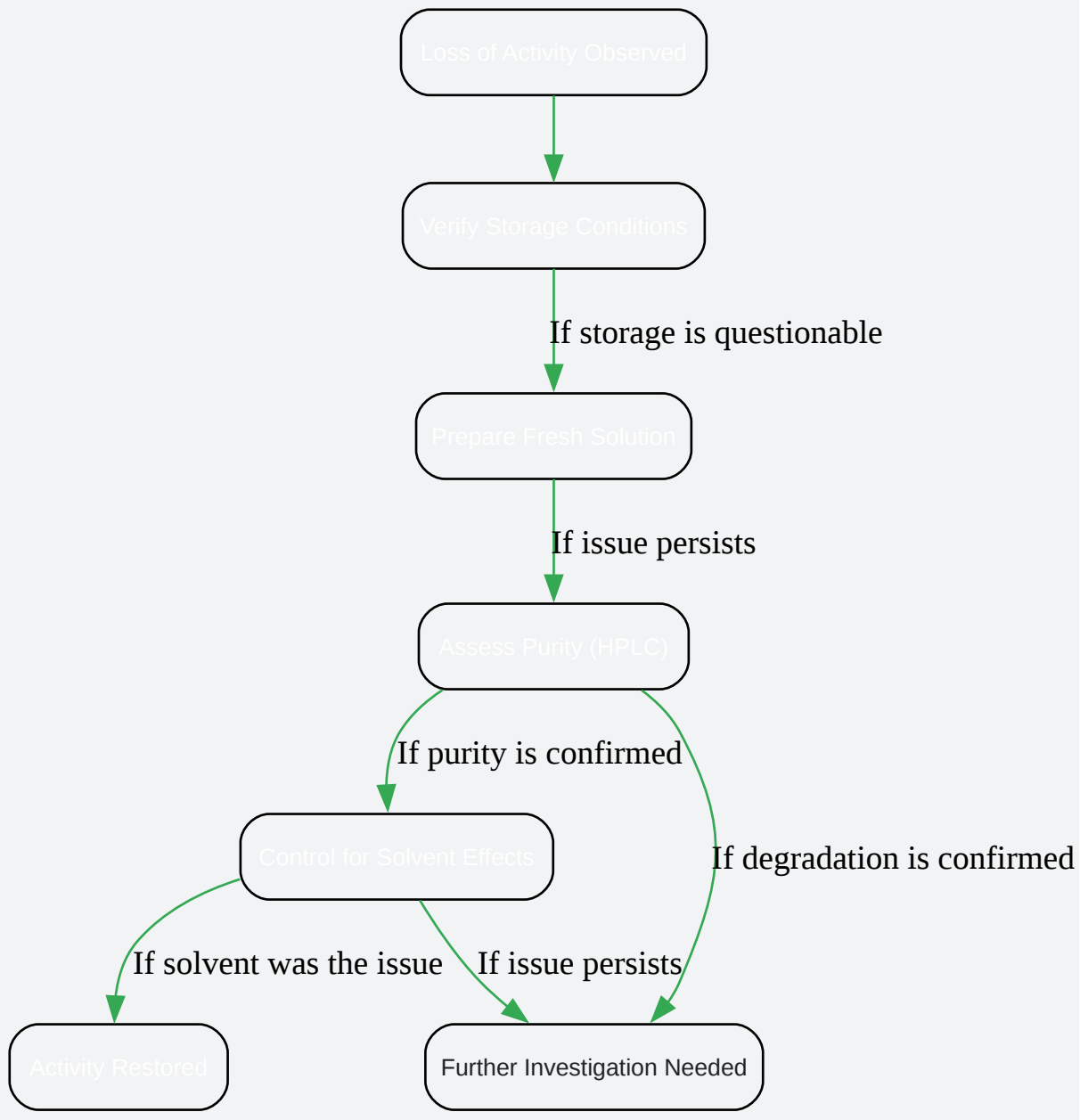

Click to download full resolution via product page

© 2026 BenchChem. All rights reserved.

Caption: A logical workflow for troubleshooting loss of **ZINC69391** activity.

Issue 2: Appearance of Unexpected Peaks in Analytical Data (e.g., HPLC, Mass Spectrometry)

The presence of additional peaks in your analytical data that were not present in the initial analysis of the compound is a strong indicator of degradation.

Troubleshooting Steps:

- Review Handling Procedures: Evaluate your experimental workflow for any steps that might introduce stress to the compound, such as prolonged exposure to light, elevated temperatures, or non-neutral pH conditions.
- Perform Forced Degradation Study: To identify potential degradation products, a forced degradation study can be performed. This involves intentionally exposing **ZINC69391** to harsh conditions. See the experimental protocol below for a general guideline.
- Characterize Degradants: If significant degradation is observed, techniques like LC-MS/MS can be used to elucidate the structure of the degradation products.

Experimental Protocols

Protocol 1: General Procedure for a Forced Degradation Study of **ZINC69391**

This protocol provides a general framework for conducting a forced degradation study. The specific concentrations and durations may need to be optimized based on the observed stability of **ZINC69391**.

Experimental Workflow: Forced Degradation Study

© 2026 BenchChem. All rights reserved.

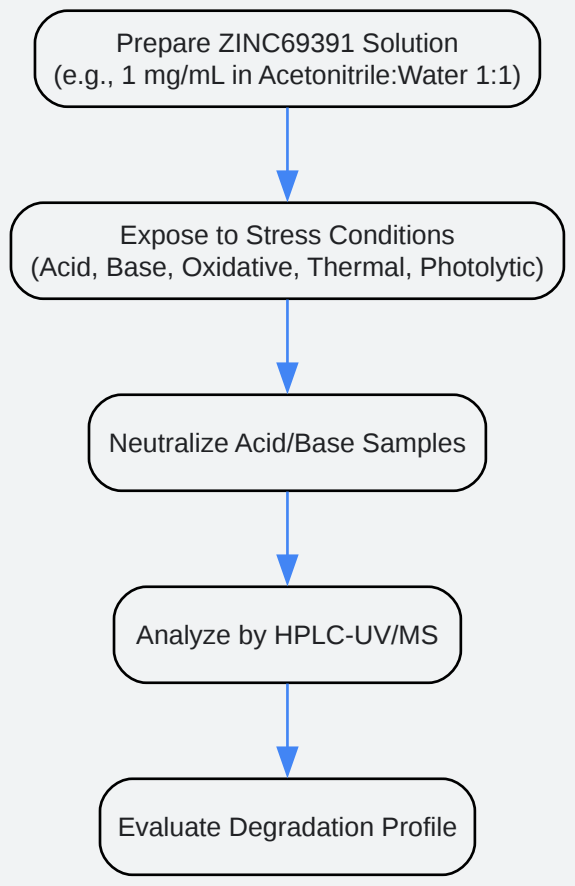

Click to download full resolution via product page

Caption: A general workflow for conducting a forced degradation study.

Materials:

- **ZINC69391**
- HPLC-grade acetonitrile and water
- Hydrochloric acid (HCl), Sodium hydroxide (NaOH), Hydrogen peroxide (H_2O_2)
- HPLC system with UV or MS detector
- C18 HPLC column (e.g., 4.6 x 150 mm, 5 µm)

Procedure:

© 2026 BenchChem. All rights reserved.

- Sample Preparation: Prepare a solution of **ZINC69391** at a concentration of 1 mg/mL in a 1:1 mixture of acetonitrile and water.
- Stress Conditions:
  - Acid Hydrolysis: To 1 mL of the **ZINC69391** solution, add 1 mL of 0.1 M HCl. Incubate at 60°C for 24 hours.
  - Base Hydrolysis: To 1 mL of the **ZINC69391** solution, add 1 mL of 0.1 M NaOH. Incubate at 60°C for 24 hours.
  - Oxidative Degradation: To 1 mL of the **ZINC69391** solution, add 1 mL of 3% H_2O_2. Store at room temperature, protected from light, for 24 hours.
  - Thermal Degradation: Store a sample of the **ZINC69391** solution at 60°C for 24 hours. For solid-state thermal degradation, store the powder at 60°C.
  - Photolytic Degradation: Expose a sample of the **ZINC69391** solution to a calibrated light source (e.g., ICH-compliant photostability chamber) for a defined period.
- Sample Neutralization: Before HPLC analysis, neutralize the acid and base-stressed samples with an equivalent amount of base or acid, respectively.
- HPLC Analysis: Analyze all samples (including an unstressed control) using a suitable stability-indicating HPLC method. A general starting method could be:
  - Column: C18, 4.6 x 150 mm, 5 µm
  - Mobile Phase A: 0.1% Formic acid in water
  - Mobile Phase B: 0.1% Formic acid in acetonitrile
  - Gradient: A time-programmed gradient from low to high organic content (e.g., 5% to 95% B over 20 minutes).
  - Flow Rate: 1.0 mL/min

© 2026 BenchChem. All rights reserved.

- Detection: UV at a wavelength where **ZINC69391** has maximum absorbance, or MS detection.

- Data Evaluation: Compare the chromatograms of the stressed samples to the control. Calculate the percentage of degradation and identify any new peaks corresponding to degradation products.

Data Presentation: Example Forced Degradation Conditions

Stress Condition	Reagent	Temperature	Duration
Acid Hydrolysis	0.1 M HCl	60°C	24 hours
Base Hydrolysis	0.1 M NaOH	60°C	24 hours
Oxidation	3% H_2O_2	Room Temp	24 hours
Thermal (Solution)	-	60°C	24 hours
Thermal (Solid)	-	60°C	24 hours
Photolytic	Light Source	Ambient	Variable

- To cite this document: BenchChem. [How to prevent ZINC69391 degradation during storage]. BenchChem, [2026]. [Online PDF]. Available at: [https://www.benchchem.com/product/b10811055/docs#how-to-prevent-zinc69391-degradation-during-storage]

Disclaimer & Data Validity:

The information provided in this document is for Research Use Only (RUO) and is strictly not intended for diagnostic or therapeutic procedures. While BenchChem strives to provide accurate protocols, we make no warranties, express or implied, regarding the fitness of this product for every specific experimental setup.

Technical Support: The protocols provided are for reference purposes. Unsure if this reagent suits your experiment?

Need Industrial/Bulk Grade? Request Custom Synthesis Quote

© 2026 BenchChem. All rights reserved.

BenchChem

Our mission is to be the trusted global source of essential and advanced chemicals, empowering scientists and researchers to drive progress in science and industry.

Contact

Address: 3281 E Guasti Rd

Ontario, CA 91761, United States

Phone: (601) 213-4426

Email: info@benchchem.com

Contact our Ph.D. Support Team for a compatibility check

© 2026 BenchChem. All rights reserved.