Technical Support Center: Optimizing WAY-655978 Dosage and Concentration

Author: BenchChem Technical Support Team. **Date**: April 2026

Compound of Interest

Compound Name:	*WAY-655978*
Cat. No.:	*B10801257*

Get Quote

Disclaimer: Information on the specific experimental usage of **WAY-655978** is limited in publicly available scientific literature. Therefore, this guide provides general recommendations and starting points for optimizing the dosage and concentration of a multi-kinase inhibitor targeting ROCK, ERK, GSK, and AGC kinases. The provided protocols and concentration ranges are illustrative and require validation for your specific experimental model and conditions.

Frequently Asked Questions (FAQs)

Q1: What is the recommended starting concentration for in vitro experiments with **WAY-655978**?

A1: For a novel inhibitor like **WAY-655978**, it is crucial to perform a dose-response study to determine the optimal concentration for your specific cell line and assay. A common starting point for multi-kinase inhibitors is to test a wide range of concentrations, typically from 10 nM to 10 µM. We recommend a logarithmic dilution series to cover this range effectively.

Q2: How can I determine the optimal concentration of **WAY-655978** for my cell-based assay?

A2: The optimal concentration can be determined by performing a cell viability assay (e.g., MTT or resazurin) in parallel with your functional assay. This will help you identify a concentration

© 2026 BenchChem. All rights reserved.

that effectively inhibits the target kinase(s) without causing significant cytotoxicity. The ideal concentration should yield a clear biological effect with minimal impact on cell viability.

Q3: What are the best practices for solubilizing and storing **WAY-655978**?

A3: Based on commercially available information, **WAY-655978** is soluble in DMSO. For in vitro experiments, it is advisable to prepare a high-concentration stock solution (e.g., 10 mM) in anhydrous DMSO. Aliquot the stock solution into single-use vials to avoid repeated freeze-thaw cycles, which can degrade the compound. Store the stock solution at -20°C or -80°C for long-term stability. For cell culture experiments, the final concentration of DMSO should be kept low (typically below 0.1%) to avoid solvent-induced artifacts.

Q4: What are potential off-target effects to consider when using a multi-kinase inhibitor like **WAY-655978**?

A4: As **WAY-655978** is known to inhibit multiple kinases (ROCK, ERK, GSK, AGC), it is important to consider that the observed phenotype may be a result of inhibiting one or more of these pathways. To dissect the specific pathway involved, you can use more selective inhibitors for each kinase as controls, or use molecular techniques like siRNA or CRISPR to knock down individual kinases and observe if the phenotype is replicated.

Q5: How should I design my in vivo studies with **WAY-655978**?

A5: For in vivo studies, a maximum tolerated dose (MTD) study is a critical first step to determine a safe and effective dose range. This involves administering escalating doses of the compound to a small cohort of animals and monitoring for signs of toxicity. Subsequently, pharmacokinetic (PK) and pharmacodynamic (PD) studies should be conducted to understand the drug's exposure and its effect on the target kinases in vivo. The route of administration and dosing frequency will also need to be optimized based on the compound's properties and the experimental model.

Troubleshooting Guides

In Vitro Experimentation

© 2026 BenchChem. All rights reserved.

Issue	Possible Cause	Troubleshooting Steps
No observable effect at expected concentrations	1. Compound instability or degradation. 2. Low cell permeability. 3. Inactive kinase pathway in the chosen cell line.	1. Prepare fresh stock solutions. Avoid repeated freeze-thaw cycles. 2. Consider using a cell line with higher expression of the target kinases or known sensitivity to similar inhibitors. 3. Confirm the activation state of the target kinase pathway (e.g., by Western blot for phosphorylated forms) before treatment.
High cytotoxicity observed	1. Concentration is too high. 2. Off-target toxicity. 3. Solvent (DMSO) toxicity.	1. Perform a dose-response curve to determine the IC50 and a non-toxic concentration range. 2. Compare with more selective inhibitors of the target kinases to assess if the toxicity is on-target. 3. Ensure the final DMSO concentration is below 0.1% in your cell culture medium.
Inconsistent results between experiments	1. Variability in cell passage number or confluency. 2. Inconsistent compound dilution or treatment time. 3. Instability of the compound in culture medium.	1. Use cells within a consistent passage number range and seed at a consistent density. 2. Prepare fresh dilutions for each experiment and ensure precise timing of treatments. 3. Test the stability of WAY-655978 in your culture medium over the course of the experiment.

In Vivo Experimentation

© 2026 BenchChem. All rights reserved.

Issue	Possible Cause	Troubleshooting Steps
No tumor growth inhibition in a xenograft model	1. Insufficient drug exposure at the tumor site. 2. Poor bioavailability. 3. Rapid metabolism of the compound.	1. Conduct pharmacokinetic (PK) studies to measure drug concentration in plasma and tumor tissue. 2. Optimize the dosing regimen (dose, frequency, and route of administration). 3. Consider co-administration with a compound that inhibits its metabolism, if known.
Animal toxicity (e.g., weight loss, lethargy)	1. Dose is above the maximum tolerated dose (MTD). 2. On-target toxicity in vital organs. 3. Off-target toxicity.	1. Perform a thorough MTD study to identify a safe dosing range. 2. Monitor for and analyze organ-specific toxicity markers. 3. If possible, use a more selective inhibitor to assess if the toxicity is related to the intended target.

Data Presentation

Table 1: Illustrative In Vitro Concentration Ranges for Kinase Inhibitors

Disclaimer: These are general concentration ranges for inhibitors of the target kinases and have not been validated for **WAY-655978**. They should be used as a starting point for optimization.

© 2026 BenchChem. All rights reserved.

Kinase Target	Typical In Vitro Concentration Range	Common Assay
ROCK	1 µM - 10 µM	Western Blot for p-MYPT1
ERK (MEK)	100 nM - 5 µM	Western Blot for p-ERK1/2
GSK-3	500 nM - 10 µM	Western Blot for p-GSK-3α/β or β-catenin accumulation
AGC Kinases (e.g., Akt)	100 nM - 1 µM	Western Blot for p-Akt

Table 2: Hypothetical In Vivo Dosing for a Novel Multi-Kinase Inhibitor

Disclaimer: This table presents a hypothetical dosing regimen for a generic multi-kinase inhibitor in a mouse xenograft model and is not based on data for **WAY-655978**.

Parameter	Example Value	Notes
Animal Model	Nude mice with subcutaneous tumor xenografts	Tumor volume should be monitored regularly.
Dose Range	10 - 100 mg/kg	To be determined by a Maximum Tolerated Dose (MTD) study.
Route of Administration	Intraperitoneal (i.p.) or Oral (p.o.)	Dependent on the compound's solubility and bioavailability.
Dosing Frequency	Once or twice daily	To be determined by pharmacokinetic (PK) studies.
Treatment Duration	2-4 weeks	Or until tumor volume reaches a predetermined endpoint.

Experimental Protocols

Protocol 1: Determining the IC50 of **WAY-655978** on a Target Kinase Pathway (e.g., ERK) using Western Blot

© 2026 BenchChem. All rights reserved.

- Cell Seeding: Plate your cells of interest in 6-well plates at a density that will result in 70-80% confluency at the time of treatment.
- Compound Preparation: Prepare a 2X serial dilution of **WAY-655978** in your cell culture medium. A typical concentration range to test would be from 20 µM down to 10 nM. Include a vehicle control (e.g., 0.1% DMSO).
- Cell Treatment: Remove the growth medium from the cells and replace it with the medium containing the different concentrations of **WAY-655978**. Incubate for the desired treatment time (e.g., 2, 6, or 24 hours).
- Cell Lysis: Wash the cells with ice-cold PBS and then lyse the cells in RIPA buffer supplemented with protease and phosphatase inhibitors.
- Protein Quantification: Determine the protein concentration of each lysate using a BCA or Bradford assay.
- Western Blotting:
  - Load equal amounts of protein (e.g., 20-30 µg) per lane on an SDS-PAGE gel.
  - Transfer the proteins to a PVDF or nitrocellulose membrane.
  - Block the membrane with 5% non-fat milk or BSA in TBST for 1 hour at room temperature.
  - Incubate the membrane with a primary antibody against the phosphorylated form of the target protein (e.g., phospho-ERK1/2) overnight at 4°C.
  - Wash the membrane and incubate with an HRP-conjugated secondary antibody for 1 hour at room temperature.
  - Develop the blot using an ECL substrate and image the chemiluminescence.
  - Strip the membrane and re-probe for the total form of the protein (e.g., total ERK1/2) and a loading control (e.g., β-actin or GAPDH).
- Data Analysis: Quantify the band intensities using image analysis software. Normalize the phosphorylated protein levels to the total protein levels. Plot the normalized values against

© 2026 BenchChem. All rights reserved.

the log of the inhibitor concentration and fit a dose-response curve to determine the IC50.

Mandatory Visualizations

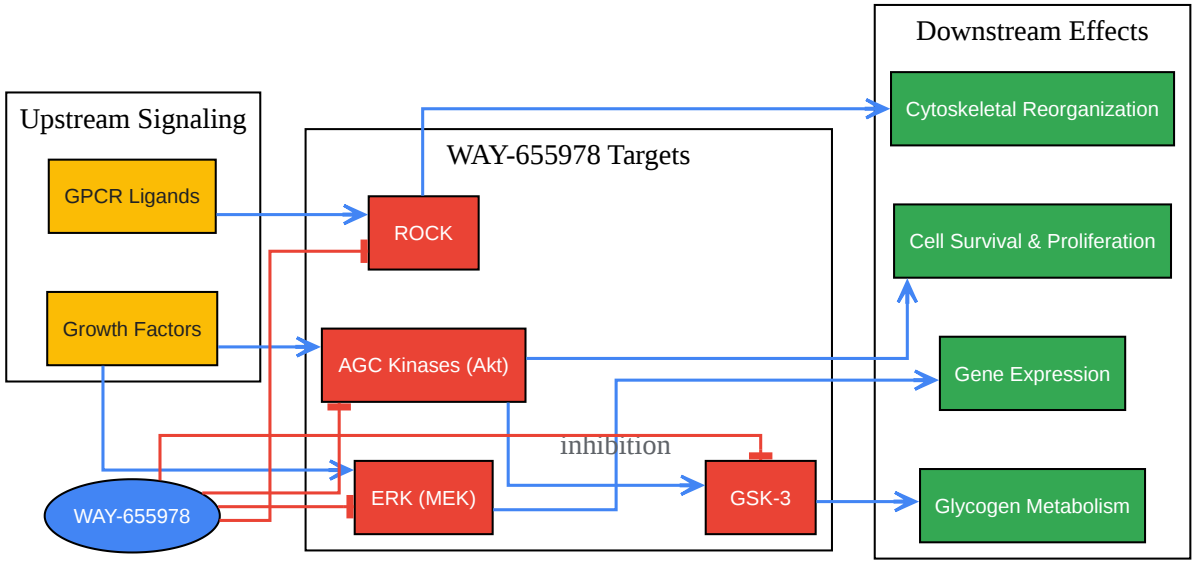

Click to download full resolution via product page

Caption: Simplified signaling pathways inhibited by **WAY-655978**.

© 2026 BenchChem. All rights reserved.

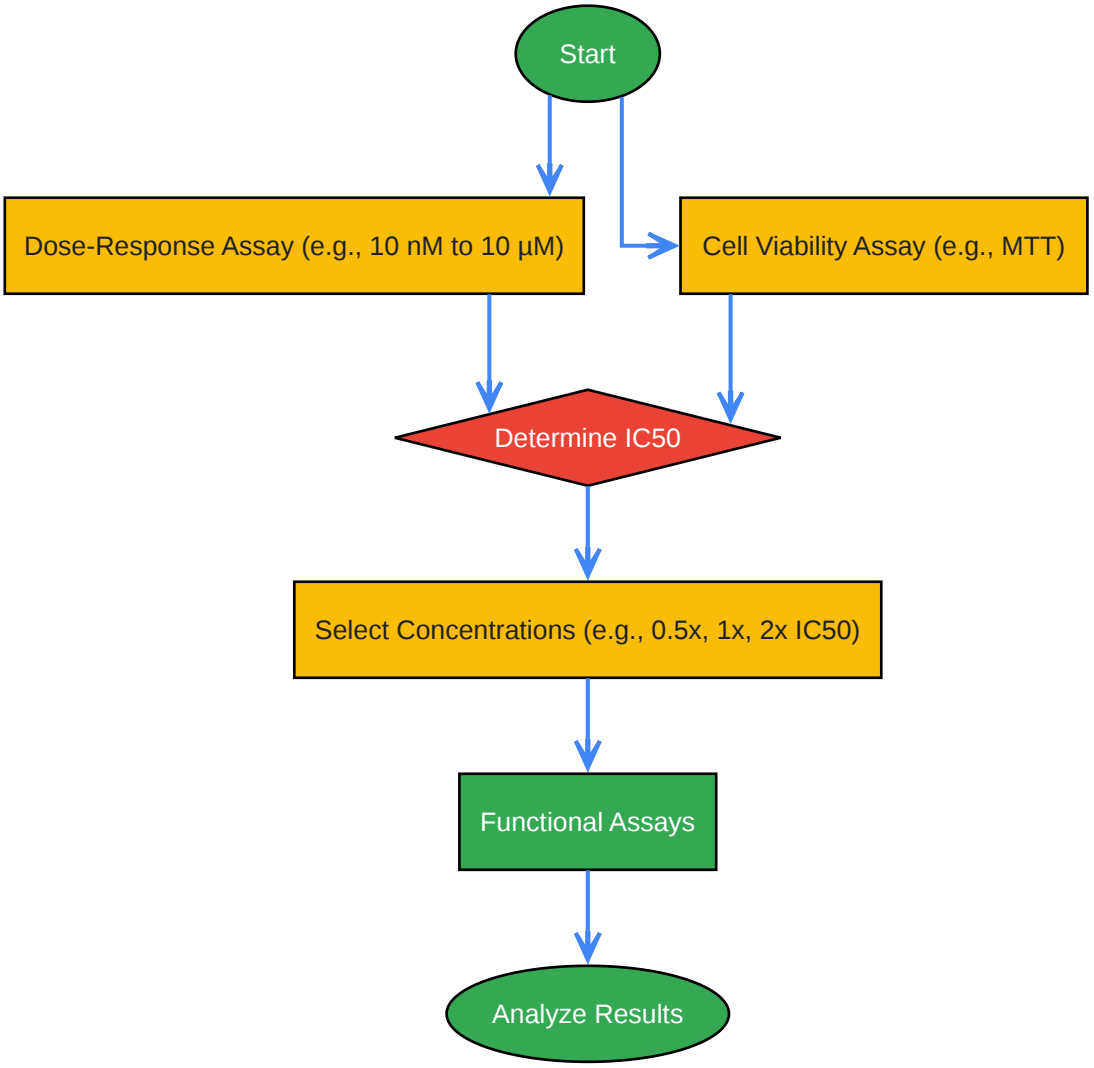

Click to download full resolution via product page

Caption: Experimental workflow for optimizing in vitro concentration.

© 2026 BenchChem. All rights reserved.

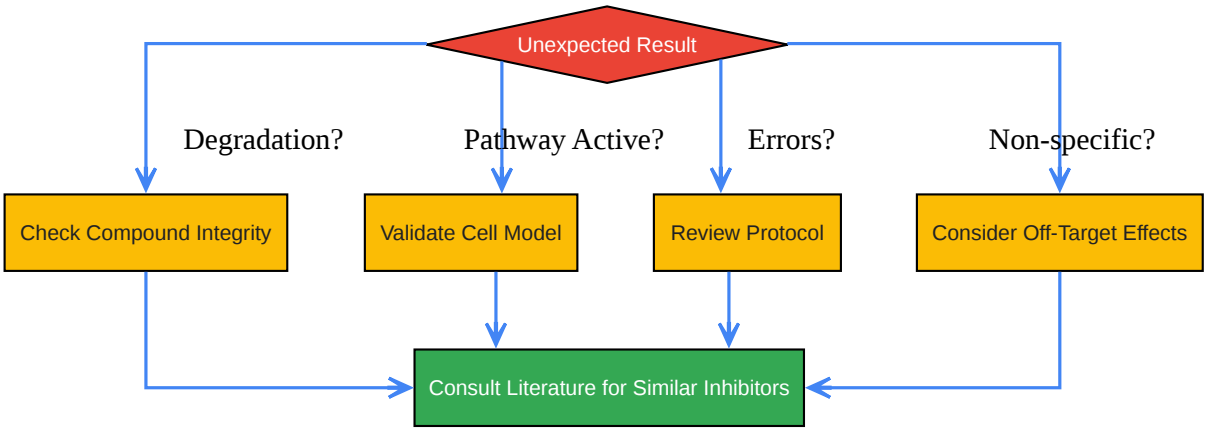

Click to download full resolution via product page

- To cite this document: BenchChem. [Technical Support Center: Optimizing WAY-655978 Dosage and Concentration]. BenchChem, [2026]. [Online PDF]. Available at: [https://www.benchchem.com/product/b10801257/docs#technical-support-center-optimizing-way-655978-dosage-and-concentration]

Disclaimer & Data Validity:

The information provided in this document is for Research Use Only (RUO) and is strictly not intended for diagnostic or therapeutic procedures. While BenchChem strives to provide accurate protocols, we make no warranties, express or implied, regarding the fitness of this product for every specific experimental setup.

Technical Support: The protocols provided are for reference purposes. Unsure if this reagent suits your experiment?

Need Industrial/Bulk Grade? Request Custom Synthesis Quote

© 2026 BenchChem. All rights reserved.

BenchChem

Our mission is to be the trusted global source of essential and advanced chemicals, empowering scientists and researchers to drive progress in science and industry.

Contact

Address: 3281 E Guasti Rd

Ontario, CA 91761, United States

Phone: (601) 213-4426

Email: info@benchchem.com

Contact our Ph.D. Support Team for a compatibility check

© 2026 BenchChem. All rights reserved.