Application Notes and Protocols for KBP-7018 in Cellular Response Studies

Author: BenchChem Technical Support Team. **Date**: April 2026

Compound of Interest

Compound Name:	*KBP-7018*
Cat. No.:	*B10780405*

Get Quote

For Researchers, Scientists, and Drug Development Professionals

Introduction

KBP-7018 is a potent, selective, small-molecule inhibitor of multiple receptor tyrosine kinases (RTKs), primarily targeting c-KIT, platelet-derived growth factor receptor (PDGFR), and the rearranged during transfection (RET) proto-oncogene.[1][2][3] Due to the critical role of these kinases in cellular proliferation, differentiation, survival, and migration, **KBP-7018** is under investigation as a therapeutic agent, particularly for conditions characterized by aberrant kinase signaling, such as idiopathic pulmonary fibrosis (IPF).[4] These application notes provide a comprehensive overview of **KBP-7018**'s mechanism of action and detailed protocols for evaluating its effects on cellular responses.

Mechanism of Action

KBP-7018 exerts its biological effects by competitively binding to the ATP-binding pocket of the kinase domain of its target RTKs. This inhibition prevents autophosphorylation and the subsequent activation of downstream signaling cascades that are crucial for pathological processes in fibrosis. The primary molecular targets of **KBP-7018** are:

© 2026 BenchChem. All rights reserved.

- c-KIT: A receptor tyrosine kinase involved in cell survival and proliferation.
- PDGFR (α and β): Key regulators of fibroblast proliferation, migration, and activation into collagen-producing myofibroblasts.
- RET: A receptor tyrosine kinase implicated in cell growth and differentiation.

By inhibiting these kinases, **KBP-7018** can effectively block the signaling pathways that drive the excessive proliferation of fibroblasts and the deposition of extracellular matrix (ECM) proteins, which are the hallmarks of fibrosis.

Data Presentation

The inhibitory activity of **KBP-7018** against its primary kinase targets has been quantified and is summarized in the table below.

Target Kinase	IC50 (nM)
c-KIT	10
PDGFR	25
RET	7.6

IC50 values represent the concentration of **KBP-7018** required to inhibit 50% of the kinase activity in vitro.[1]

Signaling Pathways and Experimental Workflow

The following diagrams illustrate the signaling pathways affected by **KBP-7018** and a general experimental workflow for its evaluation.

© 2026 BenchChem. All rights reserved.

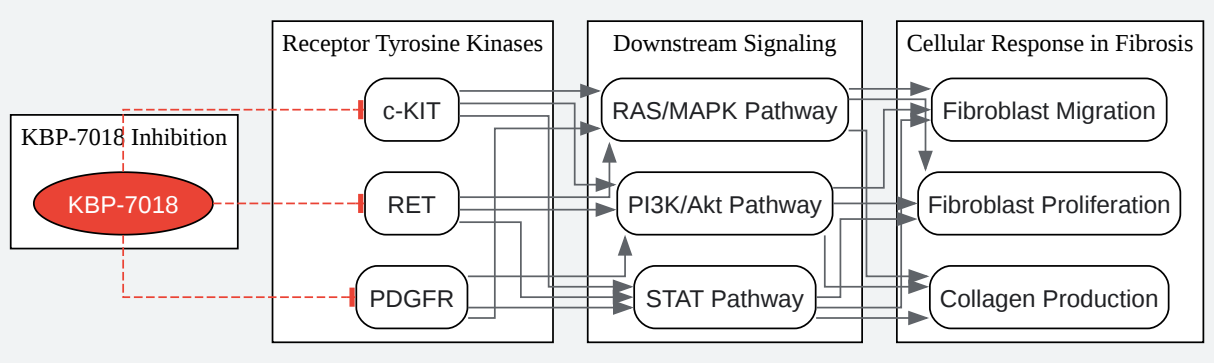

Click to download full resolution via product page

Caption: **KBP-7018** inhibits c-KIT, PDGFR, and RET, blocking downstream pro-fibrotic signaling.

© 2026 BenchChem. All rights reserved.

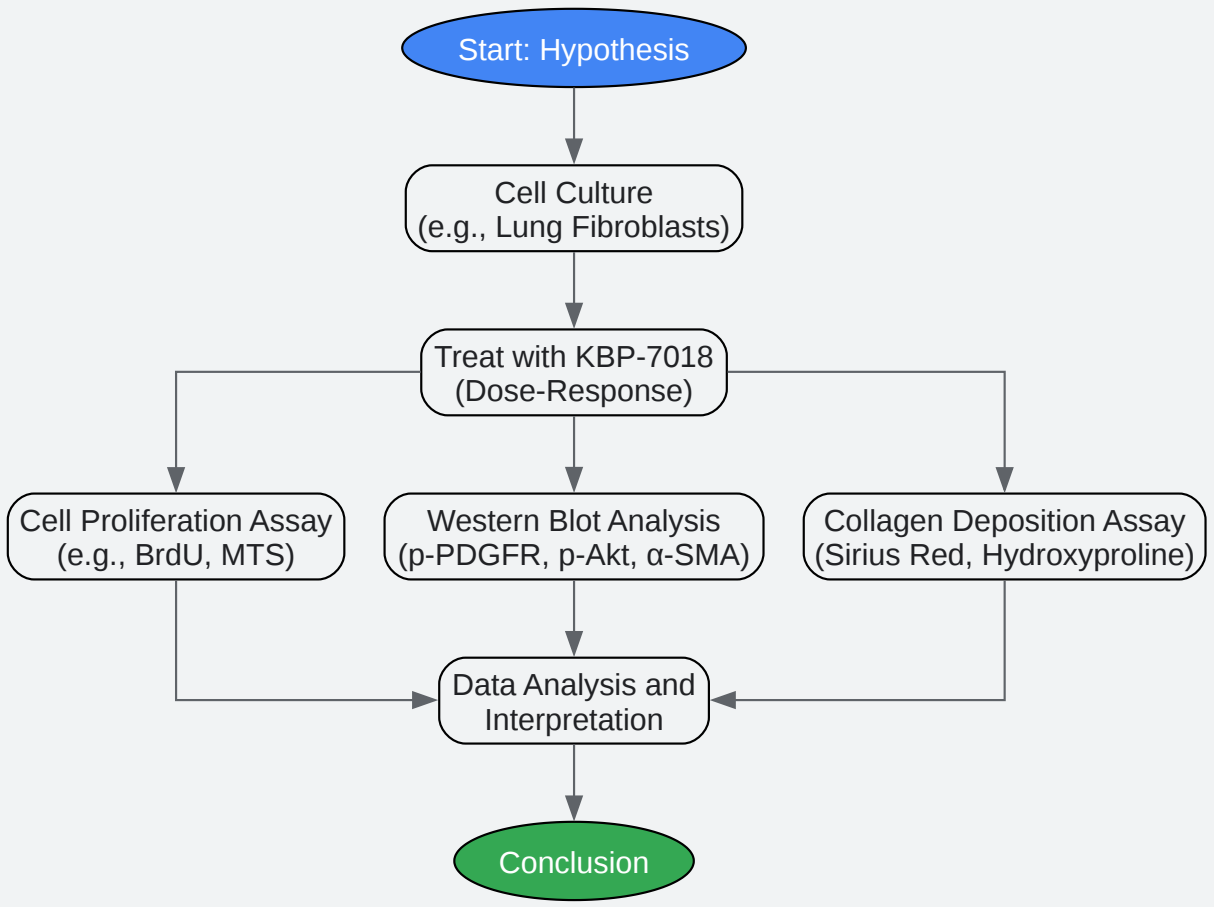

Click to download full resolution via product page

Caption: A typical experimental workflow for evaluating the anti-fibrotic effects of **KBP-7018**.

Experimental Protocols

The following are detailed, representative protocols for key experiments to assess the cellular response to **KBP-7018**. These are intended as a guide and may require optimization for specific cell types and experimental conditions.

Protocol 1: Cell Proliferation Assay (MTS Assay)

This protocol measures the effect of **KBP-7018** on the proliferation of fibroblasts.

© 2026 BenchChem. All rights reserved.

Materials:

- Human lung fibroblasts (e.g., IMR-90)
- Complete growth medium (e.g., DMEM with 10% FBS)
- **KBP-7018** (stock solution in DMSO)
- 96-well cell culture plates
- MTS reagent (e.g., CellTiter 96® AQueous One Solution Cell Proliferation Assay)
- Plate reader capable of measuring absorbance at 490 nm

Procedure:

- Cell Seeding:
  - Trypsinize and count fibroblasts.
  - Seed 5,000 cells per well in a 96-well plate in 100 µL of complete growth medium.
  - Incubate for 24 hours at 37°C in a 5% CO_2 incubator to allow for cell attachment.
- Compound Treatment:
  - Prepare serial dilutions of **KBP-7018** in complete growth medium. A typical concentration range to test would be from 1 nM to 10 µM.
  - Include a vehicle control (DMSO at the same final concentration as the highest **KBP-7018** concentration) and a no-treatment control.
  - Carefully remove the medium from the wells and add 100 µL of the prepared **KBP-7018** dilutions or control medium.
  - Incubate for 48-72 hours at 37°C in a 5% CO_2 incubator.
- MTS Assay:

© 2026 BenchChem. All rights reserved.

- Add 20 µL of MTS reagent to each well.
- Incubate for 1-4 hours at 37°C in a 5% CO_2 incubator, or until a color change is apparent.
- Measure the absorbance at 490 nm using a microplate reader.

- Data Analysis:
  - Subtract the average absorbance of the background (medium only) wells from all other absorbance readings.
  - Calculate the percentage of cell viability for each **KBP-7018** concentration relative to the vehicle control.
  - Plot the percentage of viability against the log of the **KBP-7018** concentration to determine the IC50 value for cell proliferation.

Protocol 2: Western Blot Analysis of PDGFR Phosphorylation

This protocol is for assessing the inhibition of PDGFR phosphorylation by **KBP-7018** in fibroblasts.

Materials:

- Human lung fibroblasts
- Serum-free medium
- PDGF-BB ligand
- **KBP-7018**
- RIPA lysis buffer with protease and phosphatase inhibitors
- BCA protein assay kit
- SDS-PAGE gels and running buffer

© 2026 BenchChem. All rights reserved.

- PVDF membrane
- Transfer buffer
- Blocking buffer (e.g., 5% BSA in TBST)
- Primary antibodies: anti-phospho-PDGFRβ (Tyr751), anti-total-PDGFRβ
- HRP-conjugated secondary antibody
- ECL detection reagent
- Chemiluminescence imaging system

Procedure:

- Cell Culture and Treatment:
  - Plate fibroblasts in 6-well plates and grow to 80-90% confluency.
  - Serum-starve the cells for 24 hours in serum-free medium.
  - Pre-treat the cells with various concentrations of **KBP-7018** (e.g., 10 nM, 100 nM, 1 µM) or vehicle (DMSO) for 2 hours.
  - Stimulate the cells with PDGF-BB (e.g., 50 ng/mL) for 15 minutes at 37°C.
- Cell Lysis and Protein Quantification:
  - Wash the cells twice with ice-cold PBS.
  - Lyse the cells in 100 µL of ice-cold RIPA buffer per well.
  - Scrape the cells and collect the lysate.
  - Centrifuge at 14,000 x g for 15 minutes at 4°C to pellet cell debris.
  - Transfer the supernatant to a new tube and determine the protein concentration using a BCA assay.

© 2026 BenchChem. All rights reserved.

- SDS-PAGE and Western Blotting:
  - Normalize protein concentrations and prepare samples with Laemmli sample buffer.
  - Load 20-30 µg of protein per lane on an SDS-PAGE gel.
  - Run the gel and transfer the proteins to a PVDF membrane.
  - Block the membrane with 5% BSA in TBST for 1 hour at room temperature.
  - Incubate the membrane with the primary antibody against phospho-PDGFRβ overnight at 4°C.
  - Wash the membrane three times with TBST for 10 minutes each.
  - Incubate with the HRP-conjugated secondary antibody for 1 hour at room temperature.
  - Wash the membrane three times with TBST.
  - Apply ECL reagent and visualize the bands using a chemiluminescence imager.
  - Strip the membrane and re-probe with an antibody against total PDGFRβ as a loading control.
- Data Analysis:
  - Quantify the band intensities using densitometry software.
  - Normalize the phospho-PDGFRβ signal to the total PDGFRβ signal for each sample.
  - Compare the normalized signal in **KBP-7018**-treated samples to the PDGF-BB stimulated control to determine the extent of inhibition.

Protocol 3: Collagen Deposition Assay (Sirius Red Staining)

This protocol quantifies the effect of **KBP-7018** on collagen deposition by fibroblasts.

© 2026 BenchChem. All rights reserved.

Materials:

- Human lung fibroblasts
- Complete growth medium
- TGF-β1 (to induce collagen synthesis)
- **KBP-7018**
- 24-well cell culture plates
- PBS
- Fixative solution (e.g., 4% paraformaldehyde in PBS)
- Sirius Red staining solution (0.1% Direct Red 80 in saturated picric acid)
- 0.01 M HCl
- Destaining solution (0.1 M NaOH)
- Plate reader capable of measuring absorbance at 540 nm

Procedure:

- Cell Culture and Treatment:
  - Seed fibroblasts in a 24-well plate and grow to confluency.
  - Treat the cells with TGF-β1 (e.g., 5 ng/mL) in the presence of various concentrations of **KBP-7018** or vehicle for 48-72 hours.
- Staining:
  - Gently wash the cell layers twice with PBS.
  - Fix the cells with 4% paraformaldehyde for 30 minutes at room temperature.

© 2026 BenchChem. All rights reserved.

- Wash the plates three times with distilled water.
- Air dry the plates completely.
- Add 500 µL of Sirius Red staining solution to each well and incubate for 1 hour at room temperature with gentle shaking.
- Aspirate the staining solution and wash the wells extensively with 0.01 M HCl to remove unbound dye.

- Quantification:
  - Add 200 µL of 0.1 M NaOH to each well to elute the bound stain.
  - Incubate for 30 minutes at room temperature with gentle shaking.
  - Transfer 100 µL of the destaining solution from each well to a 96-well plate.
  - Measure the absorbance at 540 nm.
- Data Analysis:
  - The absorbance is directly proportional to the amount of collagen in the well.
  - Compare the absorbance values of **KBP-7018**-treated wells to the TGF-β1 stimulated control to determine the percentage of inhibition of collagen deposition.

Conclusion

KBP-7018 is a promising multi-kinase inhibitor with potent anti-fibrotic potential. The provided application notes and protocols offer a framework for researchers to investigate the cellular responses induced by **KBP-7018** and to further elucidate its therapeutic utility in fibrotic diseases. Rigorous experimental design and data analysis are crucial for accurately characterizing the effects of this compound.

Need Custom Synthesis?

BenchChem offers custom synthesis for rare earth carbides and specific isotopiclabeling.

Email: info@benchchem.com or Request Quote Online.

References

- 1. researchgate.net [researchgate.net]
- 2. medkoo.com [medkoo.com]
- 3. KBP-7018 [cnreagent.com]
- 4. Characterization of preclinical in vitro and in vivo pharmacokinetics properties for KBP-7018, a new tyrosine kinase inhibitor candidate for treatment of idiopathic pulmonary fibrosis - PubMed [pubmed.ncbi.nlm.nih.gov]
- To cite this document: BenchChem. [Application Notes and Protocols for KBP-7018 in Cellular Response Studies]. BenchChem, [2026]. [Online PDF]. Available at: [https://www.benchchem.com/product/b10780405/docs#application-notes-and-protocols-for-kbp-7018-in-cellular-response-studies]

Disclaimer & Data Validity:

The information provided in this document is for Research Use Only (RUO) and is strictly not intended for diagnostic or therapeutic procedures. While BenchChem strives to provide accurate protocols, we make no warranties, express or implied, regarding the fitness of this product for every specific experimental setup.

Technical Support: The protocols provided are for reference purposes. Unsure if this reagent suits your experiment?

Need Industrial/Bulk Grade? Request Custom Synthesis Quote

BenchChem

Our mission is to be the trusted global source of essential and advanced chemicals, empowering scientists and researchers to drive progress in science and industry.

Contact

Address: 3281 E Guasti Rd

Ontario, CA 91761, United States

Phone: (601) 213-4426

Email: info@benchchem.com

Contact our Ph.D. Support Team for a compatibility check

© 2026 BenchChem. All rights reserved.