Confirming the Role of Lactosylceramide with Knockout Models: A Comparative Guide

Author: BenchChem Technical Support Team. **Date**: April 2026

Compound of Interest

Compound Name:	*Lactosylceramide (porcine RBC)*
Cat. No.:	*B10779143*

Get Quote

For Researchers, Scientists, and Drug Development Professionals

Lactosylceramide (LacCer), a pivotal glycosphingolipid, acts as a precursor for a wide array of complex gangliosides and functions as a critical lipid second messenger in various cellular processes. Its involvement in signaling pathways governing inflammation, oxidative stress, and neuronal function has made it a subject of intense research. The development of knockout mouse models targeting the enzymes responsible for LacCer synthesis has been instrumental in elucidating its physiological and pathological roles. This guide provides a comprehensive comparison of these knockout models, presenting key experimental data, detailed methodologies, and visual representations of the associated signaling pathways.

Performance Comparison of Lactosylceramide Synthase Knockout Models

The biosynthesis of LacCer from glucosylceramide (GlcCer) is catalyzed by lactosylceramide synthase, which is encoded by two genes: β-1,4-galactosyltransferase 5 (B4galt5) and β-1,4-galactosyltransferase 6 (B4galt6). Studies utilizing single and double knockout (DKO) mice for these genes have revealed their distinct and overlapping functions.

© 2026 BenchChem. All rights reserved.

Phenotypic and Biochemical Characteristics

© 2026 BenchChem. All rights reserved.

Characteristic	Wild-Type (WT)	B4galt5 cKO (CNS)	B4galt6 KO	B4galt5 cKO / B4galt6 KO (DKO)	Reference
Viability	Viable and fertile	Viable and fertile	Viable and fertile	Postnatal lethality (by 4 weeks)	[1](2--INVALID-LINK--
Body Weight at 3 weeks	Normal	Normal	Normal	Significantly reduced	[3](--INVALID-LINK--)
Gross Phenotype	Normal	No apparent abnormalities	No apparent abnormalities	Growth retardation, motor deficits	[1](2--INVALID-LINK--
Brain LacCer Synthase Activity	~100%	~38% of WT	~52% of WT	Completely absent	[1](--INVALID-LINK--)
Brain GlcCer Synthase Activity	Normal	Normal	Normal	Increased (~1.5-fold)	[1](4--INVALID-LINK--
Brain Glucosylceramide (GlcCer) Levels	Normal	Normal	Normal	Increased (~3-fold)	[1](--INVALID-LINK--)
Brain Galactosylceramide (GalCer) Levels	Normal	Normal	Normal	Comparable to WT	[1](--INVALID-LINK--)
Major Brain Gangliosides (GM1a, GD1a, GT1b)	Present	Present	Present	Not detected	[1](--INVALID-LINK--)

© 2026 BenchChem. All rights reserved.

Myelination in CNS	Normal	Normal	Normal	Severely impaired	[1](2--INVALID-LINK--

Note: B4galt5 knockout is embryonic lethal; therefore, a conditional knockout (cKO) in the central nervous system (CNS) using Nestin-Cre mice was generated for these studies.

Experimental Protocols

Generation of Conditional Knockout Mice

The generation of B4galt5 conditional knockout (cKO) mice involves a multi-step process utilizing the Cre-loxP system.[5](6--INVALID-LINK-- A targeting vector is designed to flank critical exons of the B4galt5 gene with loxP sites.[7](--INVALID-LINK--) This vector is then introduced into embryonic stem (ES) cells, and successfully targeted clones are selected. These ES cells are injected into blastocysts to generate chimeric mice, which are then bred to establish a floxed (B4galt5flox/flox) mouse line. To achieve CNS-specific knockout, these mice are crossed with a transgenic line expressing Cre recombinase under the control of a neuron-specific promoter, such as Nestin.[1](2--INVALID-LINK-- The B4galt5 cKO / B4galt6 KO double knockout (DKO) mice are generated by intercrossing the B4galt5 cKO mice with B4galt6 null mice.[1](--INVALID-LINK--)

© 2026 BenchChem. All rights reserved.

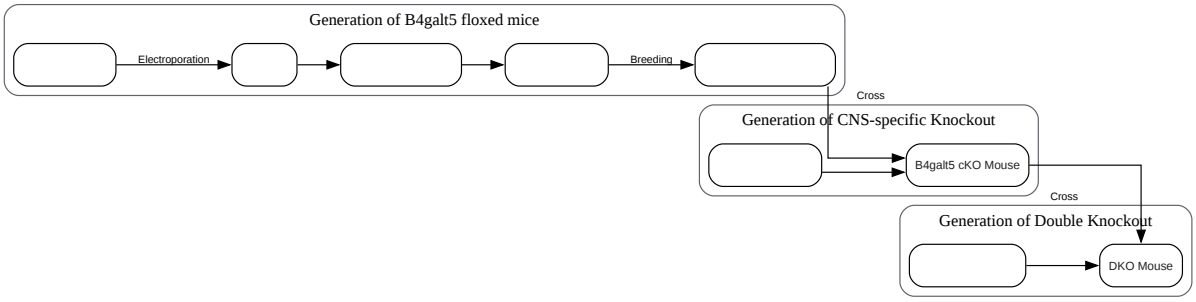

Click to download full resolution via product page

Fig. 1: Workflow for generating conditional and double knockout mice.

Lactosylceramide Synthase Activity Assay

The activity of LacCer synthase in brain homogenates can be measured using high-performance liquid chromatography (HPLC).[1](--INVALID-LINK--) The assay mixture typically contains the brain homogenate as the enzyme source, a fluorescently labeled or radiolabeled glucosylceramide as the substrate, and UDP-galactose as the galactose donor. The reaction is incubated at 37°C and then stopped. The lipids are extracted, and the product, lactosylceramide, is separated and quantified by HPLC.[1](--INVALID-LINK--) A more recent method utilizes deuterated glucosylceramide and mass spectrometry for a non-radioactive, sensitive assay.[8](--INVALID-LINK--)

Lipid Analysis by Mass Spectrometry

A comprehensive analysis of sphingolipids is crucial for understanding the metabolic consequences of LacCer synthase knockout. This is typically performed using liquid chromatography-electrospray ionization mass spectrometry (LC-ESI-MS).[1](--INVALID-LINK--) Brain tissue is homogenized, and lipids are extracted using a solvent system like chloroform/methanol. The extracted lipids are then separated by liquid chromatography and

© 2026 BenchChem. All rights reserved.

analyzed by mass spectrometry to identify and quantify different lipid species, including ceramides, sphingomyelin, sphingosine, and various gangliosides.[1](9--INVALID-LINK--

Immunohistochemistry for Myelination

To assess the extent of myelination in the central nervous system, immunohistochemistry is performed on brain sections.[7](--INVALID-LINK--) Mice are perfused, and the brains are fixed, sectioned, and stained with antibodies against myelin-specific proteins such as Myelin Basic Protein (MBP).[7](--INVALID-LINK--) Fluorescently labeled secondary antibodies are then used for visualization by microscopy. The intensity and distribution of the staining provide a qualitative and semi-quantitative measure of myelination.[7](--INVALID-LINK--)

Signaling Pathways Involving Lactosylceramide

Knockout model studies, complemented by in vitro experiments, have implicated LacCer in several key signaling cascades, particularly those related to inflammation and oxidative stress.

LacCer-Mediated Inflammatory Signaling

Upon stimulation by various agonists such as oxidized LDL or inflammatory cytokines, LacCer synthase is activated, leading to an increase in LacCer levels within lipid rafts.[1](--INVALID-LINK--) This accumulation of LacCer can trigger a cascade of inflammatory events. One major pathway involves the activation of NADPH oxidase, which generates reactive oxygen species (ROS), creating a state of oxidative stress.[1](--INVALID-LINK--) LacCer also activates cytosolic phospholipase A2 (cPLA2), which releases arachidonic acid from membrane phospholipids. Arachidonic acid is then converted into pro-inflammatory eicosanoids, such as prostaglandins and leukotrienes. Furthermore, LacCer-mediated signaling can lead to the activation of the transcription factor NF-κB, a master regulator of inflammatory gene expression.

© 2026 BenchChem. All rights reserved.

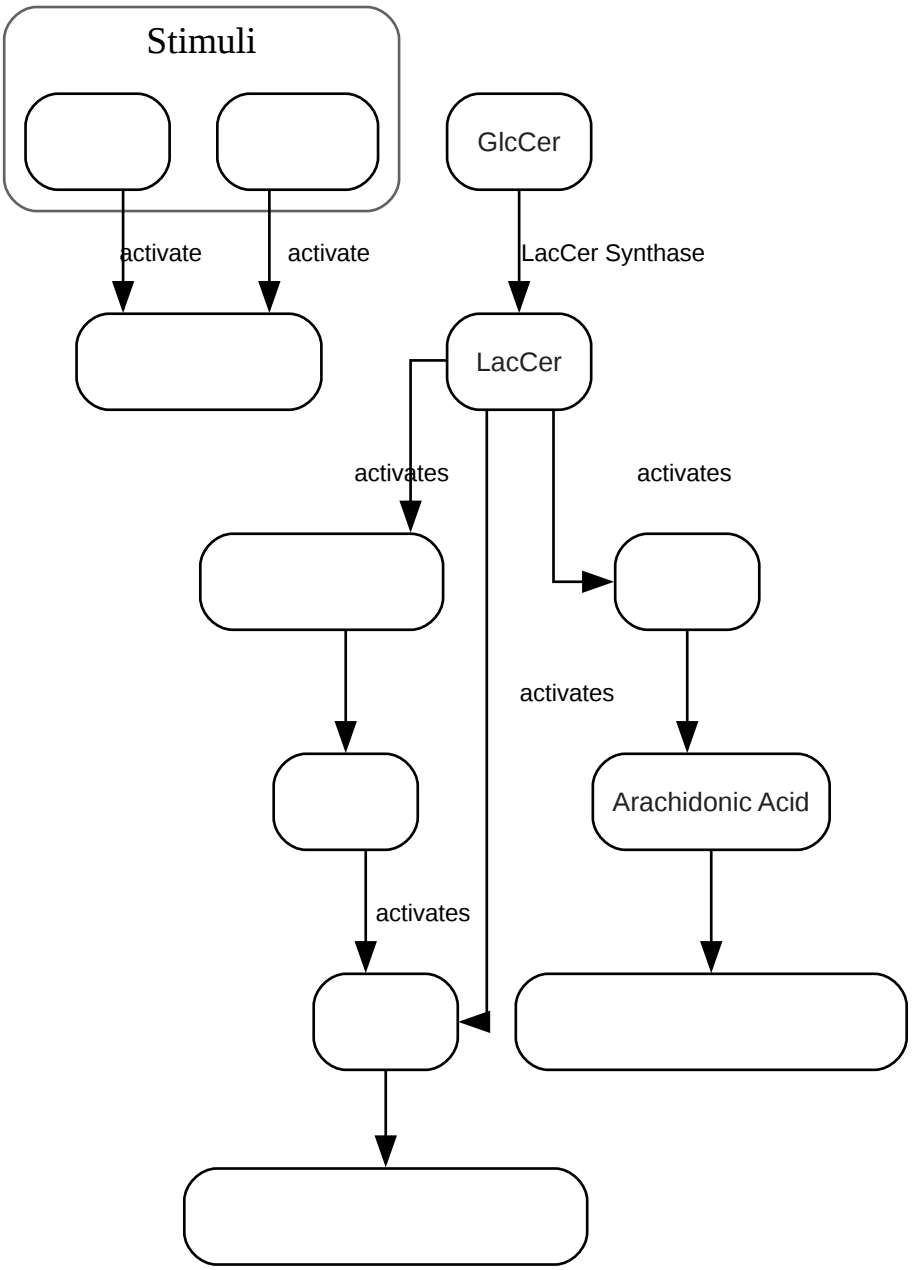

Click to download full resolution via product page

Fig. 2: LacCer-mediated inflammatory signaling pathway.

Role of LacCer Downstream Products in Neuronal Function

The complete absence of LacCer in the DKO mice leads to a lack of all downstream gangliosides.[1](--INVALID-LINK--) Gangliosides are crucial for proper neuronal function, including neurite outgrowth, synaptogenesis, and the formation and maintenance of myelin

© 2026 BenchChem. All rights reserved.

sheaths. The severe neurological phenotype observed in the DKO mice, including impaired axonal and myelin formation, underscores the essential role of the LacCer-ganglioside axis in the development and function of the central nervous system.[1](2--INVALID-LINK--

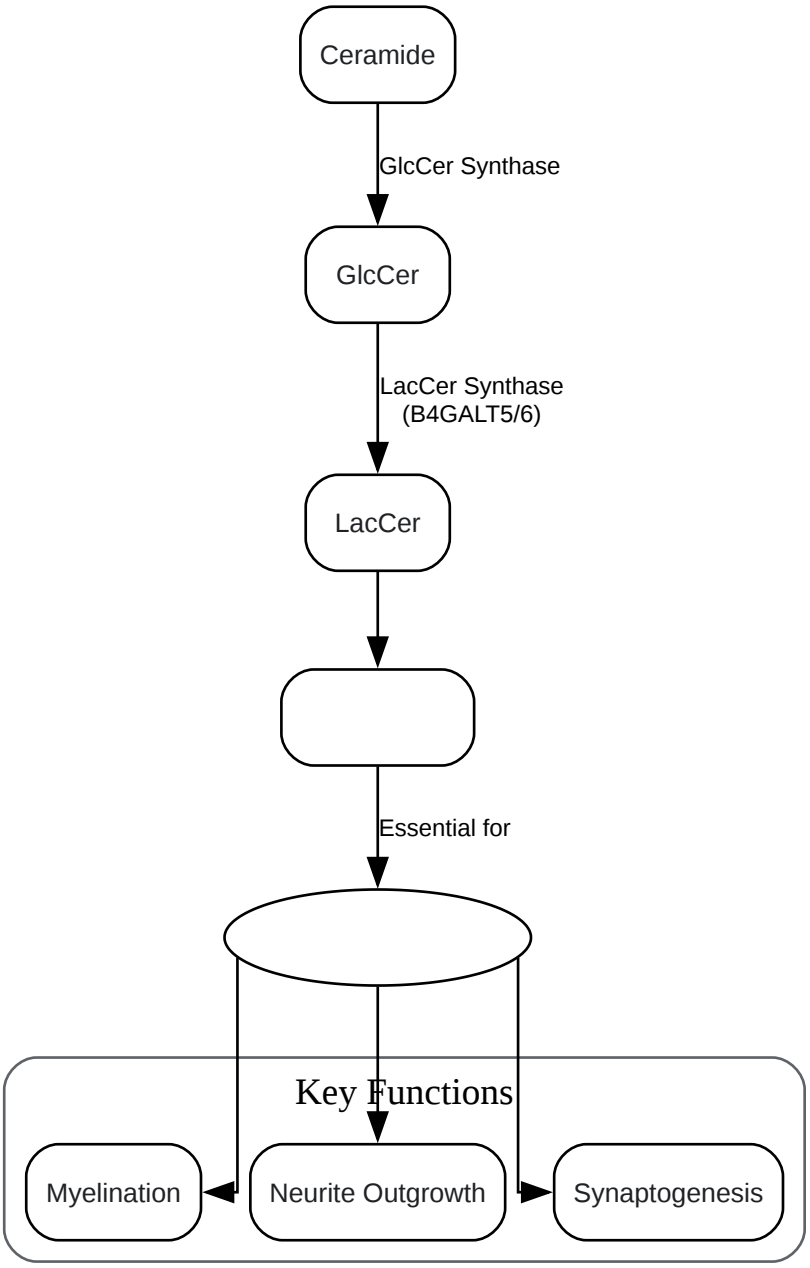

Click to download full resolution via product page

Fig. 3: The central role of LacCer in ganglioside synthesis and neuronal function.

Conclusion

© 2026 BenchChem. All rights reserved.

The use of knockout mouse models for the lactosylceramide synthase genes B4galt5 and B4galt6 has been pivotal in confirming the multifaceted roles of lactosylceramide. The severe phenotype of the double knockout mice highlights the non-redundant and essential function of LacCer as a precursor for vital gangliosides required for proper neurological development and function. Furthermore, these models provide a valuable platform for dissecting the intricate signaling pathways in which LacCer acts as a second messenger, particularly in the context of neuroinflammation and oxidative stress. Future studies with these models, potentially incorporating more detailed behavioral and neuroinflammatory analyses, will undoubtedly continue to unravel the complex biology of lactosylceramide and its potential as a therapeutic target in a range of diseases.

Need Custom Synthesis?

BenchChem offers custom synthesis for rare earth carbides and specific isotopiclabeling.

Email: info@benchchem.com or Request Quote Online.

References

- 1. B4GALT6 regulates astrocyte activation during CNS inflammation - PMC [pmc.ncbi.nlm.nih.gov]
- 2. pmc.ncbi.nlm.nih.gov [pmc.ncbi.nlm.nih.gov]
- 3. Comprehensive characterization of motor and coordination functions in three adolescent wild-type mouse strains - PMC [pmc.ncbi.nlm.nih.gov]
- 4. pmc.ncbi.nlm.nih.gov [pmc.ncbi.nlm.nih.gov]
- 5. researchgate.net [researchgate.net]
- 6. pmc.ncbi.nlm.nih.gov [pmc.ncbi.nlm.nih.gov]
- 7. researchgate.net [researchgate.net]
- 8. researchgate.net [researchgate.net]
- 9. pmc.ncbi.nlm.nih.gov [pmc.ncbi.nlm.nih.gov]
- To cite this document: BenchChem. [Confirming the Role of Lactosylceramide with Knockout Models: A Comparative Guide]. BenchChem, [2026]. [Online PDF]. Available at: [https://www.benchchem.com/product/b10779143/docs#confirming-the-role-of-lactosylceramide-with-knockout-models-a-comparative-guide]

Disclaimer & Data Validity:

The information provided in this document is for Research Use Only (RUO) and is strictly not intended for diagnostic or therapeutic procedures. While BenchChem strives to provide accurate protocols, we make no warranties, express or implied, regarding the fitness of this product for every specific experimental setup.

Technical Support: The protocols provided are for reference purposes. Unsure if this reagent suits your experiment?

Need Industrial/Bulk Grade? Request Custom Synthesis Quote

BenchChem

Our mission is to be the trusted global source of essential and advanced chemicals, empowering scientists and researchers to drive progress in science and industry.

Contact

Address: 3281 E Guasti Rd

Ontario, CA 91761, United States

Phone: (601) 213-4426

Email: info@benchchem.com

Contact our Ph.D. Support Team for a compatibility check

© 2026 BenchChem. All rights reserved.