An In-depth Technical Guide to the Signaling Pathways of YLF-466D

Author: BenchChem Technical Support Team. **Date**: April 2026

Compound of Interest

Compound Name:	*YLF-466D*
Cat. No.:	*B10769890*

Get Quote

For Researchers, Scientists, and Drug Development Professionals

YLF-466D is a versatile small molecule that has been shown to modulate multiple, distinct signaling pathways depending on the biological context. This technical guide provides a comprehensive overview of the known signaling mechanisms of **YLF-466D**, including its roles as a MEK1/2 inhibitor in the MAPK/ERK pathway, an activator of the AMPK signaling cascade, and an inhibitor of the novel Cancer-Associated Kinase 1 (CAK1). This document synthesizes available data, presents detailed experimental protocols, and visualizes the core signaling pathways to support further research and drug development efforts.

Section 1: **YLF-466D** as a MEK1/2 Inhibitor in the MAPK/ERK Signaling Pathway

YLF-466D has been identified as a potent and selective allosteric inhibitor of MEK1 and MEK2, central components of the RAS-RAF-MEK-ERK signaling cascade.[1] This pathway is a critical regulator of cell proliferation and survival and is frequently hyperactivated in various human cancers.[1] By inhibiting MEK1/2, **YLF-466D** blocks the downstream phosphorylation of ERK, thereby impeding aberrant cell growth.[1]

© 2026 BenchChem. All rights reserved.

Data Presentation

The inhibitory activity of **YLF-466D** is often quantified by its half-maximal inhibitory concentration (IC50) in cancer cell lines. The development of resistance, a common challenge with targeted therapies, is indicated by a significant increase in the IC50 value.

Table 1: Example IC50 Values for **YLF-466D** in Sensitive and Resistant Cancer Cell Lines[1]

Cell Line	Status	YLF-466D IC50 (nM)	Fold Resistance
Parental Line	Sensitive	15	1x
Resistant Subclone 1	Acquired Resistance	250	16.7x
Resistant Subclone 2	Acquired Resistance	1500	100x

Signaling Pathway Diagram

© 2026 BenchChem. All rights reserved.

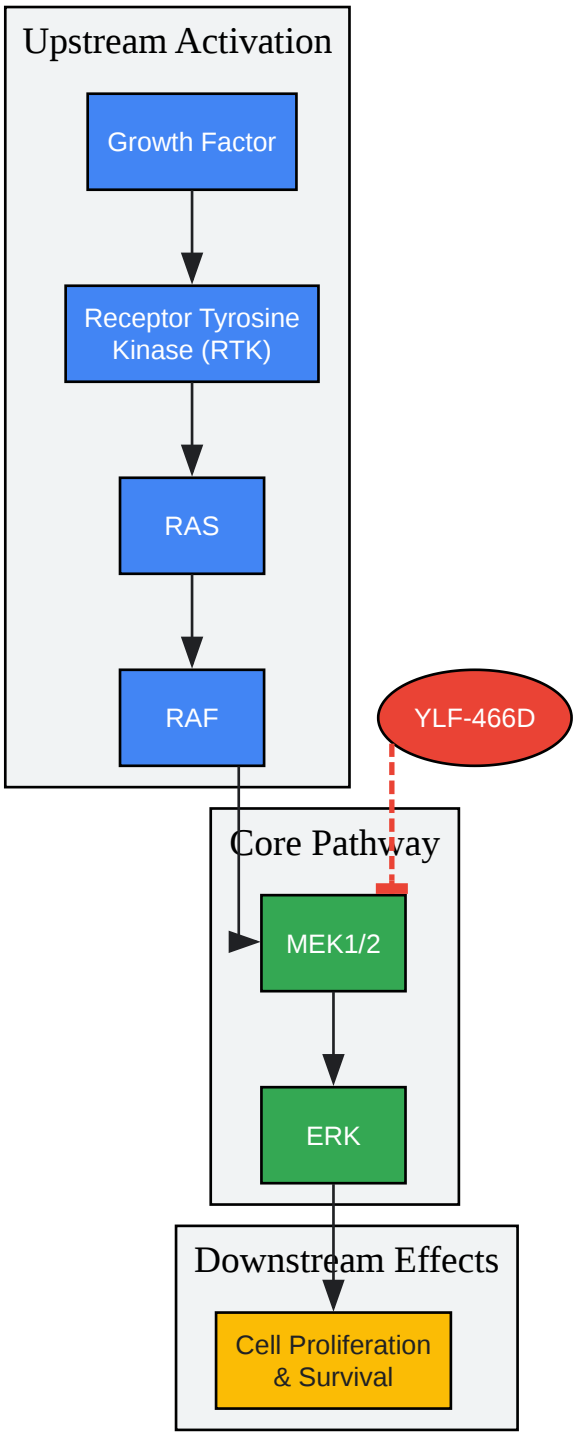

Click to download full resolution via product page

Caption: **YLF-466D** inhibits the MAPK/ERK signaling pathway by targeting MEK1/2.

Experimental Protocols

© 2026 BenchChem. All rights reserved.

1. Cell Viability Assay (MTT Assay) to Determine IC50[1]

- Objective: To quantify the concentration of **YLF-466D** required to inhibit the growth of a cancer cell line by 50%.
- Procedure:
  - Seed cancer cells in a 96-well plate at an optimal density and allow them to adhere overnight.
  - Prepare serial dilutions of **YLF-466D** in the appropriate culture medium.
  - Replace the existing medium with the medium containing various concentrations of **YLF-466D**. Include a vehicle control (e.g., DMSO).
  - Incubate the plate for 72 hours under standard cell culture conditions (37°C, 5% CO2).
  - Add MTT solution to each well and incubate for 4 hours to allow for the formation of formazan crystals in viable cells.
  - Solubilize the formazan crystals by adding a solubilization agent, such as DMSO.
  - Measure the absorbance at 570 nm using a microplate reader.
  - Calculate cell viability as a percentage relative to the vehicle control and plot a dose-response curve to determine the IC50 value.

2. Western Blotting for MAPK Pathway Activity[1]

- Objective: To assess the effect of **YLF-466D** on the phosphorylation status of ERK, the direct downstream target of MEK.
- Procedure:
  - Culture parental and **YLF-466D**-resistant cells.
  - Treat the cells with **YLF-466D** at various concentrations for a specified time.

© 2026 BenchChem. All rights reserved.

- Lyse the cells to extract total protein.
- Determine protein concentration using a standard assay (e.g., BCA assay).
- Separate protein lysates by SDS-PAGE and transfer them to a PVDF membrane.
- Block the membrane and probe with primary antibodies against phosphorylated ERK (p-ERK) and total ERK.
- Incubate with appropriate secondary antibodies.
- Visualize protein bands using a chemiluminescence detection system. A reduction in the p-ERK/total ERK ratio indicates effective MEK inhibition.

Section 2: YLF-466D as an Activator of the AMPK Signaling Pathway

In the context of hematology, **YLF-466D** functions as a novel activator of AMP-activated protein kinase (AMPK), a key regulator of cellular energy homeostasis.[2][3] In platelets, AMPK activation by **YLF-466D** initiates a signaling cascade that leads to the inhibition of platelet aggregation.[2][3]

Data Presentation

The antiplatelet activity of **YLF-466D** is demonstrated by its IC50 values against various platelet agonists.

Table 2: IC50 Values of **YLF-466D** Against Platelet Agonists[2]

Agonist	IC50 (μM)
Thrombin	84
ADP	55
Collagen	87

© 2026 BenchChem. All rights reserved.

Data indicates a concentration-dependent inhibition of platelet aggregation, with the highest efficacy observed at 150 μM.[2]

Signaling Pathway Diagram

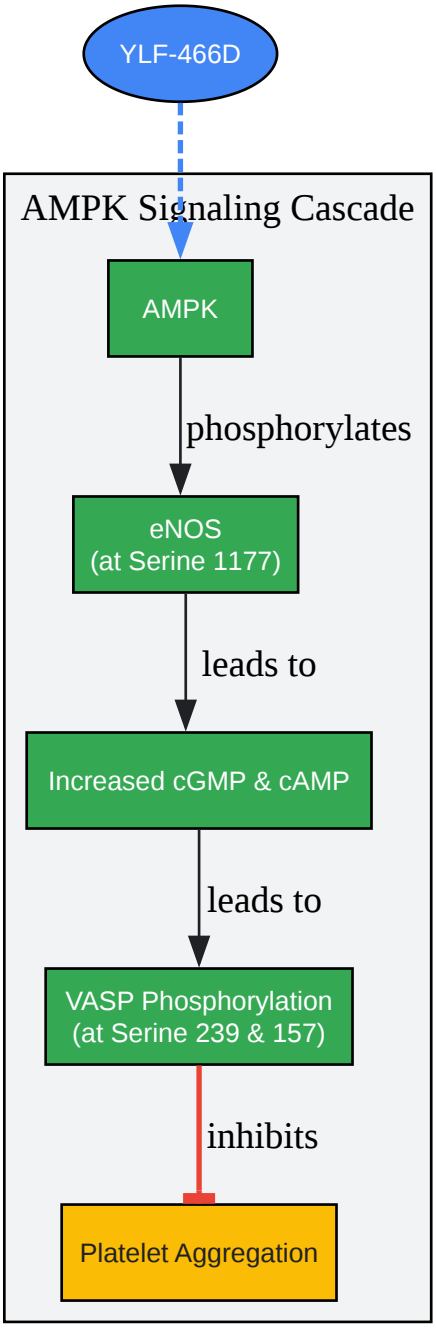

Click to download full resolution via product page

Caption: **YLF-466D** activates the AMPK pathway, leading to the inhibition of platelet aggregation.

Experimental Protocols

1. In Vitro Platelet Aggregation Assay[2]

- Objective: To measure the inhibitory effect of **YLF-466D** on platelet aggregation induced by various agonists.
- Procedure:
  - Isolate platelets from whole blood.
  - Treat the isolated platelets with varying concentrations of **YLF-466D** (e.g., 50-150 µM).
  - Induce platelet aggregation using agonists such as thrombin, ADP, or collagen.
  - Monitor platelet aggregation using a platelet aggregometer, which measures changes in light transmission or impedance.
  - Calculate the percentage of inhibition compared to a control group without **YLF-466D**.

2. Whole Blood Aggregation Assay[2]

- Objective: To evaluate the effect of **YLF-466D** on platelet aggregation in a more physiologically relevant environment.
- Procedure:
  - Collect whole blood from anesthetized rats using 3.2% sodium citrate as an anticoagulant.
  - Dilute the blood with normal saline.
  - Incubate the whole blood with **YLF-466D** (50-150 µM) for 3 minutes.
  - Induce aggregation with a collagen solution (e.g., 7.5 µg/mL).

© 2026 BenchChem. All rights reserved.

- Assess aggregation by measuring the change in impedance with a whole blood aggregometer.

Section 3: YLF-466D as a CAK1 Inhibitor in Cancer Research

YLF-466D has also been characterized as a potent and selective small molecule inhibitor of Cancer-Associated Kinase 1 (CAK1), a novel tyrosine kinase.[4] The overexpression and constitutive activation of CAK1 are implicated in the proliferation, survival, and metastasis of various cancers.[4]

Data Presentation

The anti-cancer activity of **YLF-466D** as a CAK1 inhibitor is demonstrated by its potent and selective cytotoxicity against cancer cell lines with high CAK1 expression.

Table 3: In Vitro Cytotoxicity (IC50) of **YLF-466D** in Various Cancer Cell Lines[4]

Cell Line	Cancer Type	CAK1 Expression	IC50 (nM)
A549	Lung Carcinoma	High	15.2
MDA-MB-231	Breast Cancer	High	28.7
HCT116	Colon Carcinoma	High	45.1
Panc-1	Pancreatic Cancer	Moderate	150.8
MCF-7	Breast Cancer	Low	> 1000
PC-3	Prostate Cancer	Low	> 1000

The in vivo efficacy has been evaluated in murine xenograft models.

Table 4: In Vivo Efficacy of **YLF-466D** in A549 Xenograft Model[4]

© 2026 BenchChem. All rights reserved.

Treatment Group	Dose	Tumor Growth Inhibition (%)
Vehicle Control	-	0
YLF-466D	10 mg/kg	65
YLF-466D	25 mg/kg	88

Signaling Pathway Diagram

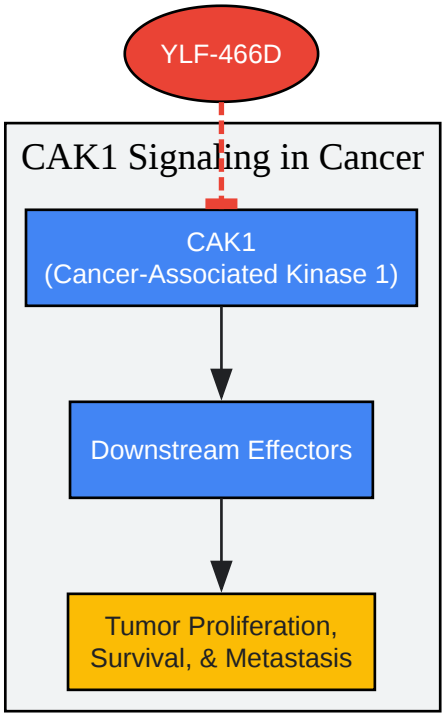

Click to download full resolution via product page

Caption: **YLF-466D** inhibits the oncogenic activity of CAK1 in cancer cells.

Experimental Protocols

1. Murine Xenograft Model for In Vivo Efficacy[4]

- Objective: To assess the anti-tumor efficacy of **YLF-466D** in a living organism.
- Procedure:

© 2026 BenchChem. All rights reserved.

- Subcutaneously inject A549 lung carcinoma cells into the flank of immunodeficient mice.
- Allow tumors to grow to an average volume of 100-150 mm^3.
- Randomize mice into treatment and vehicle control groups.
- Administer **YLF-466D** (e.g., 10 and 25 mg/kg) or vehicle control daily via oral gavage.
- Measure tumor volume with calipers every 2-3 days using the formula: Volume = (length × $width^2$) / 2.
- Monitor the body weight of the mice as an indicator of toxicity.
- After a predetermined period (e.g., 21 days), euthanize the mice and excise the tumors for further analysis.
- Calculate the tumor growth inhibition for each treatment group relative to the vehicle control.

2. Apoptosis Assay by Flow Cytometry[4]

- Objective: To determine if **YLF-466D** induces apoptosis in cancer cells.
- Procedure:
  - Seed cancer cells in 6-well plates and allow them to attach overnight.
  - Treat cells with **YLF-466D** at various concentrations (e.g., 0.5x, 1x, and 2x IC50) for 24-48 hours.
  - Harvest the cells, wash with cold PBS, and resuspend in 1X Binding Buffer.
  - Stain the cells with Annexin V-FITC and Propidium Iodide (PI).
  - Incubate for 15 minutes at room temperature in the dark.
  - Analyze the stained cells using a flow cytometer to quantify the percentage of apoptotic (Annexin V positive) and necrotic (PI positive) cells.

© 2026 BenchChem. All rights reserved.

Need Custom Synthesis?

BenchChem offers custom synthesis for rare earth carbides and specific isotopiclabeling.

Email: info@benchchem.com or Request Quote Online.

References

- 1. benchchem.com [benchchem.com]
- 2. benchchem.com [benchchem.com]
- 3. Antiplatelet effect of a newly developed AMP-activated protein kinase activator YLF-466D - PubMed [pubmed.ncbi.nlm.nih.gov]
- 4. benchchem.com [benchchem.com]
- To cite this document: BenchChem. [An In-depth Technical Guide to the Signaling Pathways of YLF-466D]. BenchChem, [2026]. [Online PDF]. Available at: [https://www.benchchem.com/product/b10769890/docs#an-in-depth-technical-guide-to-the-signaling-pathways-of-ylf-466d]

Disclaimer & Data Validity:

The information provided in this document is for Research Use Only (RUO) and is strictly not intended for diagnostic or therapeutic procedures. While BenchChem strives to provide accurate protocols, we make no warranties, express or implied, regarding the fitness of this product for every specific experimental setup.

Technical Support: The protocols provided are for reference purposes. Unsure if this reagent suits your experiment?

Need Industrial/Bulk Grade? Request Custom Synthesis Quote

BenchChem

Our mission is to be the trusted global source of essential and advanced chemicals, empowering scientists and researchers to drive progress in science and industry.

Contact

Address: 3281 E Guasti Rd

Ontario, CA 91761, United States

Phone: (601) 213-4426

Email: info@benchchem.com

Contact our Ph.D. Support Team for a compatibility check

© 2026 BenchChem. All rights reserved.