Optimizing YM-244769 Dihydrochloride Working Concentration: A Technical Support Guide

Author: BenchChem Technical Support Team. **Date**: April 2026

Compound of Interest

Compound Name:	*YM-244769 dihydrochloride*
Cat. No.:	*B10768938*

Get Quote

This technical support center provides researchers, scientists, and drug development professionals with essential information for optimizing the working concentration of **YM-244769 dihydrochloride** in their experiments.

Frequently Asked Questions (FAQs)

Q1: What is **YM-244769 dihydrochloride** and what is its primary mechanism of action?

YM-244769 dihydrochloride is a potent, selective, and orally active inhibitor of the Na+/Ca2+ exchanger (NCX).[1][2] It functions by blocking the exchange of sodium and calcium ions across the cell membrane. Notably, it preferentially inhibits the reverse mode of the exchanger, which is responsible for calcium entry into the cell.[3][4]

Q2: Does YM-244769 show selectivity for specific NCX isoforms?

Yes, YM-244769 exhibits preferential inhibition of the NCX3 isoform.[3][4][5] Its inhibitory potency is approximately four to five times greater for NCX3 compared to NCX1 and NCX2.[3]

Q3: What is a typical starting concentration for in vitro experiments?

© 2026 BenchChem. All rights reserved.

Based on published data, a starting concentration in the range of 10 nM to 1 µM is recommended for most in vitro cell-based assays. The optimal concentration will depend on the specific cell type, the NCX isoform(s) expressed, and the experimental endpoint. For instance, in studies protecting against hypoxia/reoxygenation-induced cell damage in SH-SY5Y cells, concentrations of 0.3 µM and 1 µM have been shown to be effective.[1]

Q4: How should I dissolve **YM-244769 dihydrochloride**?

YM-244769 dihydrochloride is soluble in aqueous solutions. For a stock solution, dissolving it in water or a buffer such as PBS is recommended. One protocol suggests that a clear solution of at least 2.08 mg/mL (4.03 mM) can be achieved.[6] For cell culture experiments, it is common to prepare a concentrated stock solution in DMSO and then dilute it to the final working concentration in the culture medium.[1]

Q5: Are there any known off-target effects I should be aware of?

While YM-244769 is considered a fairly specific blocker of NCX, as with any pharmacological inhibitor, the possibility of off-target effects should be considered, especially at higher concentrations.[4] It is always advisable to include appropriate controls in your experiments to validate the specificity of the observed effects.

Troubleshooting Guide

© 2026 BenchChem. All rights reserved.

Issue	Possible Cause	Recommendation
No observable effect at the initial working concentration.	- Concentration too low: The chosen concentration may be insufficient to inhibit the target NCX isoform in your specific cell type. - Low NCX expression: The cell line may have low or no expression of the target NCX isoform. - Drug degradation: Improper storage or handling of the compound may have led to its degradation.	- Perform a dose-response curve to determine the optimal concentration for your experimental system. - Verify the expression of NCX isoforms (NCX1, NCX2, NCX3) in your cell line using techniques like Western blotting or qPCR. - Ensure the compound is stored as recommended by the manufacturer and prepare fresh stock solutions.
High cell toxicity or unexpected off-target effects.	- Concentration too high: The working concentration may be in a toxic range for your cells. - Solvent toxicity: If using a solvent like DMSO, the final concentration of the solvent in the culture medium might be too high.	- Lower the working concentration and perform a cell viability assay (e.g., MTT or LDH assay) to determine the cytotoxic concentration. - Ensure the final solvent concentration is well below the toxic threshold for your cells (typically <0.1-0.5% for DMSO).
Inconsistent results between experiments.	- Variability in cell culture: Differences in cell passage number, confluency, or overall health can affect the response to the inhibitor. - Inconsistent drug preparation: Variations in the preparation of stock and working solutions.	- Standardize your cell culture protocols. Use cells within a consistent passage number range and ensure similar confluency at the time of treatment. - Prepare fresh stock solutions regularly and use precise dilution methods.

Quantitative Data Summary

© 2026 BenchChem. All rights reserved.

The following tables summarize the inhibitory potency of YM-244769 across different NCX isoforms and its effective concentrations in various experimental settings.

Table 1: Inhibitory Potency (IC50) of YM-244769 on NCX Isoforms

NCX Isoform	IC50 (nM)	Experimental System
NCX1	68 ± 2.9	CCL39 cells transfected with NCX1[1][3]
NCX2	96 ± 3.5	CCL39 cells transfected with NCX2[1][3]
NCX3	18 ± 1.0	CCL39 cells transfected with NCX3[1][3][5]
Unidirectional Outward NCX Current (Ca2+ entry mode)	50	Guinea pig cardiac ventricular myocytes[1][7]
Bidirectional Outward and Inward NCX Current	~100	Guinea pig cardiac ventricular myocytes[1][7]

Table 2: Effective Concentrations of YM-244769 in In Vitro Studies

Cell Line	Concentration	Experimental Context	Outcome
SH-SY5Y	0.3 µM, 1 µM	Protection against hypoxia/reoxygenation -induced LDH release[1]	Significant attenuation of cell damage.[1]
LLC-PK1	1 µM	Protection against hypoxia/reoxygenation -induced LDH release[1]	Potent protection against renal cell damage.[3]
MO3.13	100 nM	Inhibition of BED washout-induced Ca2+ rise[8]	Significant prevention of Ca2+ increase.[8]

© 2026 BenchChem. All rights reserved.

Experimental Protocols

Protocol 1: Determination of IC50 using 45Ca2+ Uptake Assay in Transfected Cells

This protocol describes the methodology to determine the inhibitory potency of YM-244769 on different NCX isoforms.

- Cell Culture: Culture CCL39 fibroblasts stably transfected with either NCX1, NCX2, or NCX3 in appropriate growth medium.
- Cell Plating: Seed the cells in 24-well plates and grow to confluence.
- Sodium Loading: To induce the reverse mode of the NCX, load the cells with Na+ by incubating them in a high-Na+ buffer.
- Initiation of Ca2+ Uptake: Remove the Na+-loading buffer and add an uptake buffer containing 45Ca2+ and varying concentrations of YM-244769 (e.g., 0.003 µM to 1 µM).
- Termination of Uptake: After a short incubation period (e.g., 10 seconds), stop the uptake by rapidly washing the cells with an ice-cold stop solution (e.g., LaCl3 solution).
- Cell Lysis and Scintillation Counting: Lyse the cells and measure the amount of incorporated 45Ca2+ using a liquid scintillation counter.
- Data Analysis: Plot the 45Ca2+ uptake against the concentration of YM-244769 and fit the data to a sigmoidal dose-response curve to determine the IC50 value.

Protocol 2: Neuroprotection Assay in SH-SY5Y Cells

This protocol outlines a method to assess the protective effects of YM-244769 against hypoxia/reoxygenation-induced cell injury.

- Cell Culture: Culture SH-SY5Y human neuroblastoma cells in a suitable medium.
- Hypoxia Induction: Place the cells in a hypoxic chamber with a low oxygen concentration (e.g., <1% O2) for a defined period (e.g., 8 hours).

© 2026 BenchChem. All rights reserved.

- Reoxygenation and Treatment: Return the cells to normoxic conditions and treat with different concentrations of YM-244769 (e.g., 0.3 µM and 1 µM).
- Assessment of Cell Viability: After a further incubation period (e.g., 16 hours), assess cell viability using a lactate dehydrogenase (LDH) release assay. Measure the LDH activity in the culture medium and in cell lysates.
- Data Analysis: Calculate the percentage of LDH release as an indicator of cell death. Compare the LDH release in YM-244769-treated cells to that in untreated control cells.

Visualizations

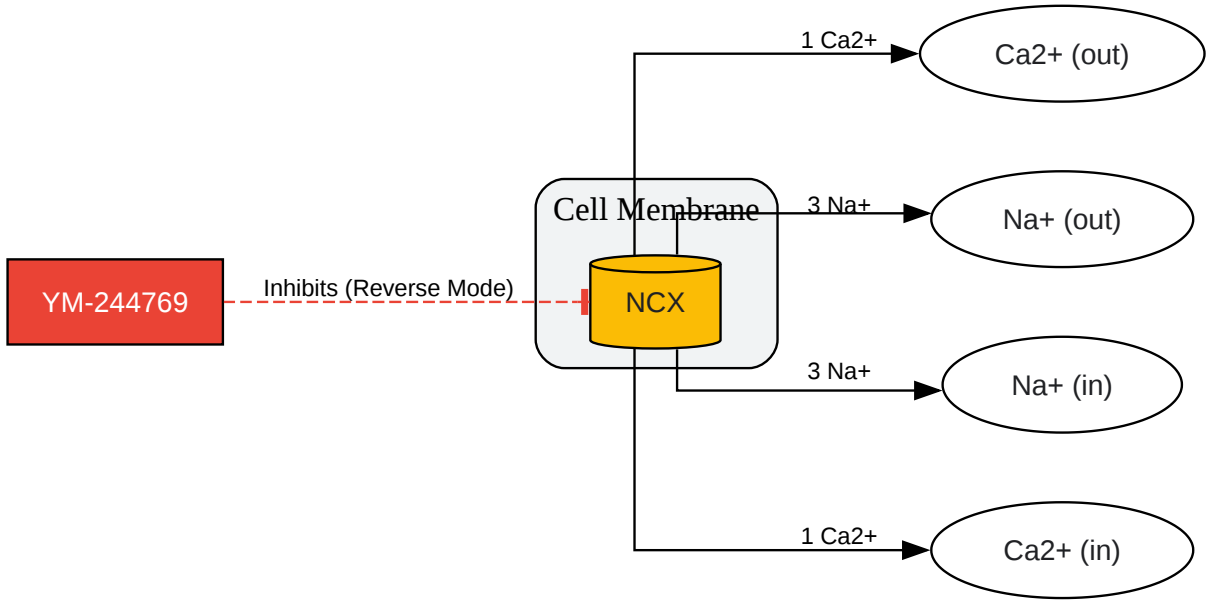

Click to download full resolution via product page

Caption: Signaling pathway of YM-244769 action.

© 2026 BenchChem. All rights reserved.

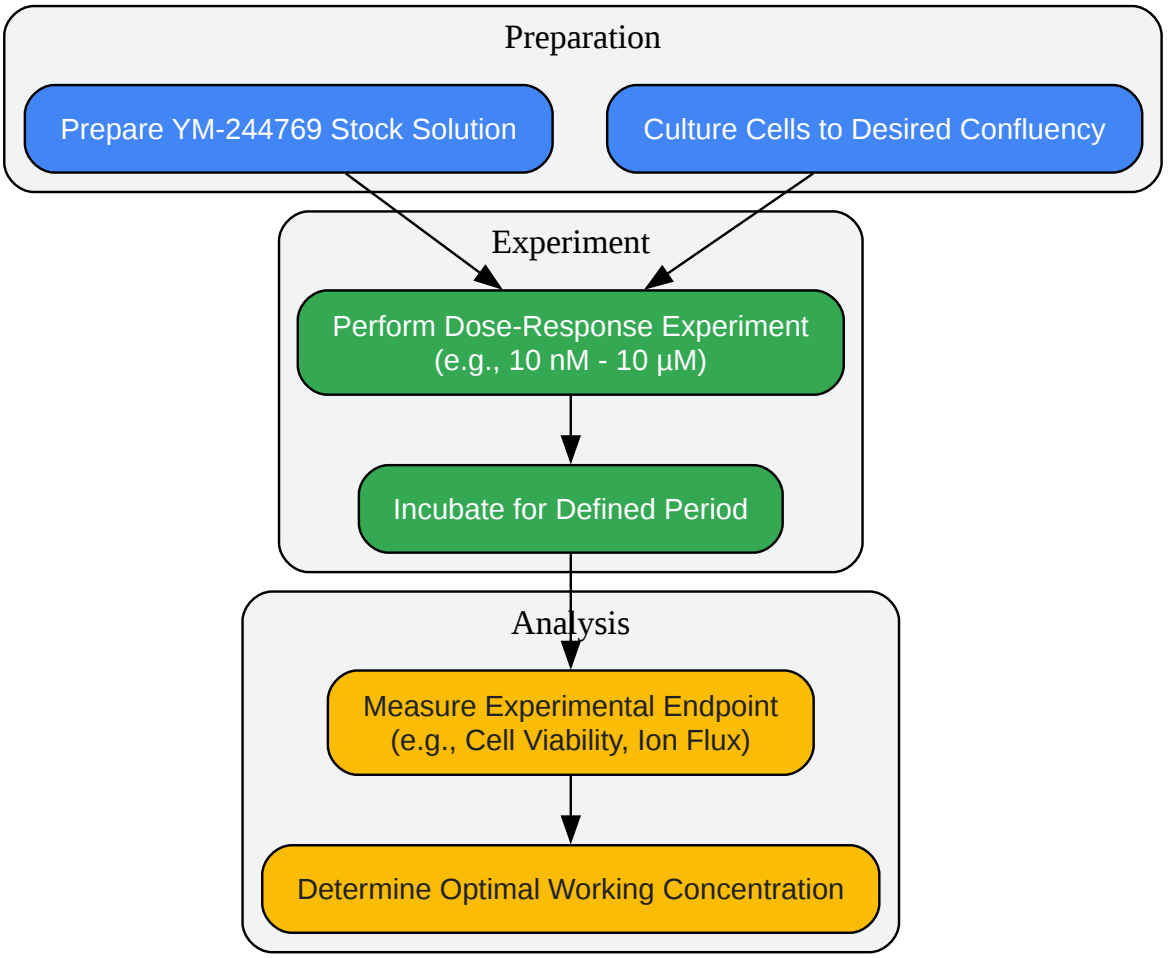

Click to download full resolution via product page

Need Custom Synthesis?

BenchChem offers custom synthesis for rare earth carbides and specific isotopiclabeling.

Email: info@benchchem.com or Request Quote Online.

References

- 1. medchemexpress.com [medchemexpress.com]
- 2. YM 244769 hydrochloride - Immunomart [immunomart.com]
- 3. Redirecting [linkinghub.elsevier.com]

- 4. researchgate.net [researchgate.net]
- 5. YM-244769, a novel Na+/Ca2+ exchange inhibitor that preferentially inhibits NCX3, efficiently protects against hypoxia/reoxygenation-induced SH-SY5Y neuronal cell damage - PubMed [pubmed.ncbi.nlm.nih.gov]
- 6. YM-244769 dihydrochloride | Na+/Ca2+交换抑制剂 | MCE [medchemexpress.cn]
- 7. Inhibitory effect of YM-244769, a novel Na+/Ca2+ exchanger inhibitor on Na+/Ca2+ exchange current in guinea pig cardiac ventricular myocytes - PubMed [pubmed.ncbi.nlm.nih.gov]
- 8. iris.unina.it [iris.unina.it]
- To cite this document: BenchChem. [Optimizing YM-244769 Dihydrochloride Working Concentration: A Technical Support Guide]. BenchChem, [2026]. [Online PDF]. Available at: [https://www.benchchem.com/product/b10768938/docs#optimizing-ym-244769-dihydrochloride-working-concentration-a-technical-support-guide]

Disclaimer & Data Validity:

The information provided in this document is for Research Use Only (RUO) and is strictly not intended for diagnostic or therapeutic procedures. While BenchChem strives to provide accurate protocols, we make no warranties, express or implied, regarding the fitness of this product for every specific experimental setup.

Technical Support: The protocols provided are for reference purposes. Unsure if this reagent suits your experiment?

Need Industrial/Bulk Grade? Request Custom Synthesis Quote

BenchChem

Our mission is to be the trusted global source of essential and advanced chemicals, empowering scientists and researchers to drive progress in science and industry.

Contact

Address: 3281 E Guasti Rd

Ontario, CA 91761, United States

Phone: (601) 213-4426

Email: info@benchchem.com

© 2026 BenchChem. All rights reserved.

Contact our Ph.D. Support Team for a compatibility check

© 2026 BenchChem. All rights reserved.