Exploring the Oncogenic Transformation Potential of PAF Analogs: A Technical Guide

Author: BenchChem Technical Support Team. **Date**: April 2026

Compound of Interest

Compound Name: *Methylcarbamyl PAF C-8*

Cat. No.: *B10767573*

Get Quote

For Researchers, Scientists, and Drug Development Professionals

Abstract

The platelet-activating factor (PAF) and its analogs are potent lipid mediators that exert a wide range of biological effects through the G-protein coupled PAF receptor (PAFR).[1][2][3] Emerging evidence has strongly implicated the PAF/PAFR signaling axis in the initiation and progression of various cancers.[1][4][5] This technical guide provides an in-depth exploration of the oncogenic transformation potential of PAF analogs, detailing the underlying molecular mechanisms, summarizing key quantitative data, and presenting standardized experimental protocols for assessing their effects. The guide also visualizes critical signaling pathways and experimental workflows to facilitate a deeper understanding for researchers and drug development professionals in the field of oncology.

Introduction: PAF and the PAF Receptor in Cancer

Platelet-activating factor (1-O-alkyl-2-acetyl-sn-glycero-3-phosphocholine) is a highly potent phospholipid mediator involved in a diverse array of physiological and pathological processes, including inflammation, allergic responses, and thrombosis.[3] PAF and its structural or functional analogs exert their effects by binding to a specific seven-transmembrane G-protein-

© 2026 BenchChem. All rights reserved.

coupled receptor, the PAFR.[1] This receptor is expressed on the surface of numerous cell types, including platelets, endothelial cells, and various immune cells.[1][3]

Crucially, many types of malignant cells have been shown to express PAFR and, in some cases, produce PAF themselves, creating an autocrine or paracrine signaling loop within the tumor microenvironment.[1][6] This self-sustaining activation of the PAF/PAFR axis plays a pivotal role in multiple facets of cancer progression, including oncogenic transformation, carcinogenesis, evasion of apoptosis, angiogenesis, and metastasis.[1][5] The ability of PAFR to interact and synergize with other oncogenic signaling cascades, such as the EGFR pathway, further highlights its significance as a potential target in cancer therapy.[5]

This guide will dissect the role of PAF analogs—both agonists that mimic PAF and antagonists that block its receptor—in the context of oncogenic transformation.

The PAF/PAFR Signaling Axis: Core Oncogenic Pathways

Upon binding of PAF or an agonist analog, the PAFR activates multiple heterotrimeric G proteins (primarily Gq and Gi), initiating a cascade of downstream signaling events that converge on key oncogenic pathways.[7] These pathways collectively drive cellular proliferation, survival, and invasion.

The primary signaling cascades implicated in PAF-mediated oncogenesis include:

- PI3K/Akt/mTOR Pathway: Activation of this pathway is a critical driver of cell survival, proliferation, and growth. PAFR activation can inhibit the tumor suppressor PTEN, leading to the phosphorylation and activation of PI3K and Akt, which are crucial signals for tumor cell survival and differentiation.[8]

- MAPK/ERK Pathway: The mitogen-activated protein kinase (MAPK) cascade, particularly the ERK pathway, is fundamental for transmitting proliferative signals from the cell membrane to the nucleus. PAFR signaling robustly activates this pathway, contributing to uncontrolled cell division.[8]

- JAK/STAT Pathway: The Janus kinase (JAK) and signal transducer and activator of transcription (STAT) pathway is directly linked to cytokine signaling and inflammation-driven

© 2026 BenchChem. All rights reserved.

cancers. PAF/PAFR signaling has been shown to stimulate the STAT3 pathway, which is a primary regulator of tumor growth and invasion.[1] In non-small cell lung cancer (NSCLC), a positive feedback loop between PAFR and STAT3 promotes metastasis.[8]

- NF-κB Pathway: Nuclear factor kappa B (NF-κB) is a master regulator of inflammation and immunity, and its constitutive activation is a hallmark of many cancers. PAF is a known activator of NF-κB, which in turn induces the expression of genes involved in angiogenesis, such as Vascular Endothelial Growth Factor (VEGF), and cell survival.[5][6][8]

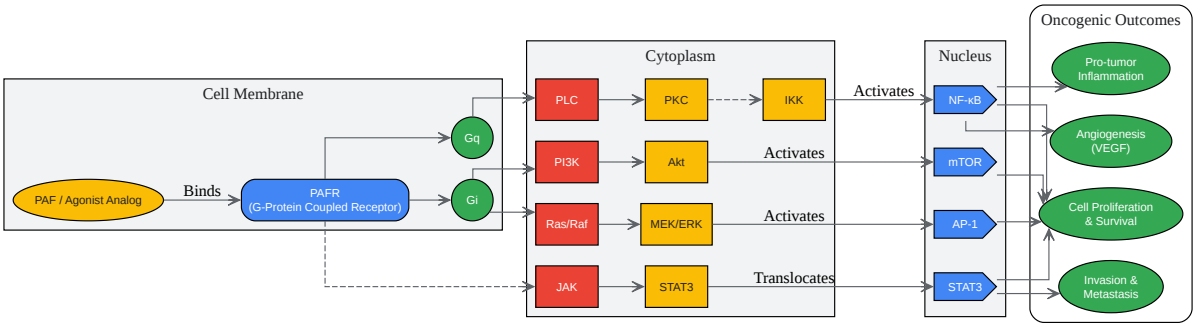

Core Signaling Pathways in PAF-Mediated Oncogenesis

Click to download full resolution via product page

Core Signaling Pathways in PAF-Mediated Oncogenesis

Quantitative Effects of PAF Analogs on Oncogenic Parameters

The study of PAF analogs has provided quantitative insights into their roles in cancer. Agonists have been shown to promote cancer cell proliferation and survival, while antagonists have

© 2026 BenchChem. All rights reserved.

demonstrated significant therapeutic potential by inhibiting these processes.

Table 1: Effects of PAF Agonist Analogs on Oncogenic Processes

Cancer Type	PAF Analog / Condition	Parameter Measured	Result	Reference
Ovarian Cancer	PAF	Stemness (Sphere Formation)	~2.5-fold increase in sphere formation	[5]
Non-Small Cell Lung	PAF	Cell Invasion (Transwell Assay)	Significant increase in invaded cells	[8]
Melanoma	PAF	Cell Migration	Stimulation of CREB-dependent migration	[8]
Breast Cancer	VEGF/bFGF stimulation	Endogenous PAF Production	Increased PAF synthesis in MCF7, T-47D	[8]
Various Tumor Lines	Radiation Therapy	PAF-R Agonist Generation	Increased levels of oxidized PAF agonists	[9]

Table 2: Inhibitory Effects of PAF Antagonist Analogs in Cancer Models

© 2026 BenchChem. All rights reserved.

Cancer Type	PAFR Antagonist	Parameter Measured	Result	Reference
Breast Cancer	WEB2170	Tumor Growth	Inhibition of tumor growth	[8]
Prostate Cancer	PCA-4248	Tumor Growth	Inhibition of tumor growth	[8]
Kaposi's Sarcoma	BN 52021	Tumor Growth	Inhibition of tumor growth	[8]
Melanoma	BN50739	Pulmonary Metastasis	Blocked PAF-augmented metastasis	[9]
Multiple Models	Various Antagonists	Chemotherapy/Radiotherapy Efficacy	Enhanced efficacy of treatment	[1][2][8]

Experimental Protocols for Assessing Oncogenic Transformation

Evaluating the oncogenic potential of PAF analogs requires a series of well-defined in vitro and in vivo experiments. These assays measure the key hallmarks of cellular transformation.

Experimental Workflow

A typical workflow to assess the oncogenic potential of a PAF analog involves sequential in vitro assays to determine its effect on cell growth and survival, followed by in vivo studies to confirm tumorigenicity.

© 2026 BenchChem. All rights reserved.

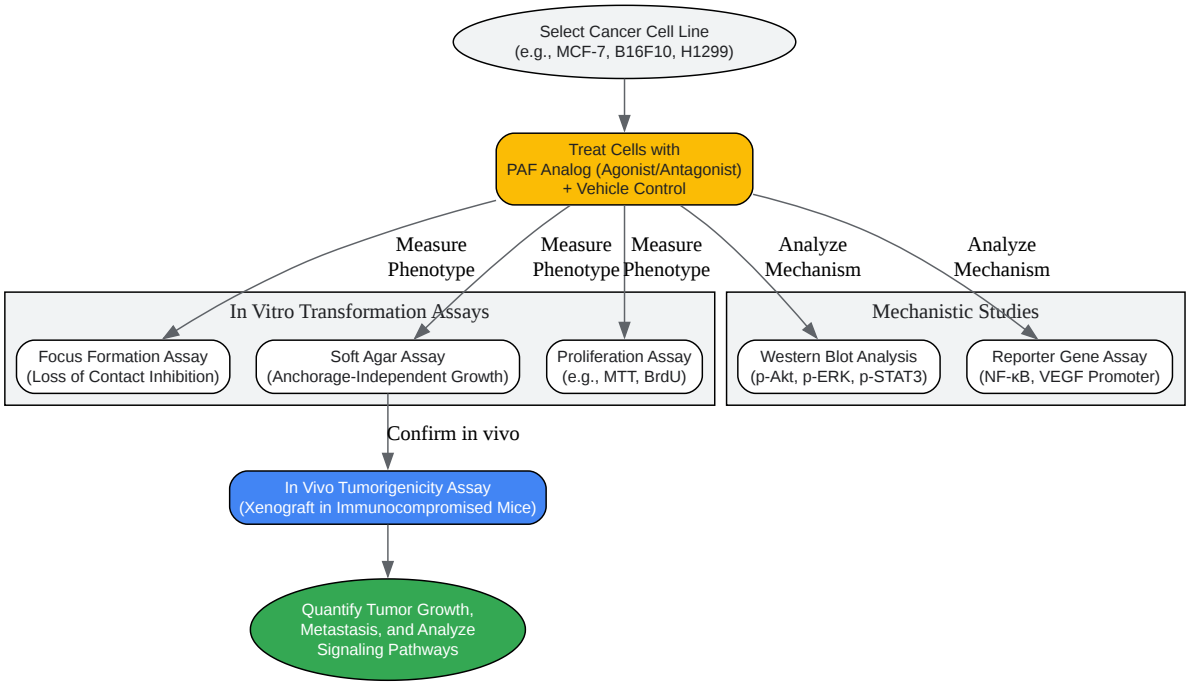

Click to download full resolution via product page

Workflow for Assessing Oncogenic Potential of PAF Analogs

Protocol: Soft Agar Colony Formation Assay

This assay is the gold standard for determining anchorage-independent growth, a hallmark of cellular transformation.

Objective: To measure the ability of cells, after treatment with a PAF analog, to proliferate and form colonies in a semi-solid medium.

© 2026 BenchChem. All rights reserved.

Materials:

- Base Agar Layer: 1.2% Noble Agar in 2x complete medium (e.g., DMEM with 20% FBS).
- Top Agar Layer: 0.7% Noble Agar in 2x complete medium.
- Cell Suspension: Cancer cells pre-treated with the PAF analog or vehicle control, resuspended in complete medium.
- 6-well culture plates.
- PAF analog (agonist or antagonist) for inclusion in the agar layers.

Procedure:

- Prepare Base Layer: Mix equal volumes of molten 1.2% agar (kept at 42°C) and 2x complete medium. Add the PAF analog to the desired final concentration. Quickly pipette 1.5 mL of this mixture into each well of a 6-well plate. Allow it to solidify at room temperature for 20-30 minutes.
- Prepare Top Layer: Trypsinize and count the pre-treated cells. Prepare a single-cell suspension. For each well, mix 750 µL of 0.7% molten agar with 750 µL of the cell suspension (containing ~5,000-10,000 cells) in 2x complete medium. Ensure the PAF analog is also included at the correct concentration.
- Plate Cells: Gently layer 1.5 mL of the top agar/cell mixture over the solidified base layer.
- Incubation: Incubate the plates at 37°C in a 5% CO_2 incubator for 14-21 days. Add 100 µL of complete medium (containing the PAF analog) to each well every 3-4 days to prevent drying.
- Staining and Counting: After the incubation period, stain the colonies with 0.005% Crystal Violet in methanol for 1-2 hours. Wash the wells gently with PBS. Count the number of colonies larger than a predefined diameter (e.g., 50 µm) using a microscope.
- Data Analysis: Compare the number and size of colonies in the PAF analog-treated wells to the vehicle control wells.

© 2026 BenchChem. All rights reserved.

Protocol: Western Blot Analysis of Signaling Pathways

Objective: To quantify the activation (via phosphorylation) of key proteins in oncogenic signaling pathways (e.g., Akt, ERK, STAT3) following treatment with a PAF analog.

Materials:

- Cancer cells cultured in 6-well plates or 10 cm dishes.
- PAF analog and vehicle control.
- Lysis Buffer: RIPA buffer supplemented with protease and phosphatase inhibitors.
- Protein Assay Kit (e.g., BCA).
- SDS-PAGE gels, running and transfer buffers.
- PVDF or nitrocellulose membranes.
- Blocking Buffer: 5% non-fat milk or BSA in TBST.
- Primary Antibodies: e.g., anti-phospho-Akt (Ser473), anti-total-Akt, anti-phospho-ERK1/2, anti-total-ERK1/2, etc.
- Secondary Antibody: HRP-conjugated anti-rabbit or anti-mouse IgG.
- Enhanced Chemiluminescence (ECL) substrate.

Procedure:

- Cell Treatment: Seed cells and grow to 70-80% confluency. Serum-starve the cells for 12-24 hours if necessary. Treat the cells with the PAF analog or vehicle for the desired time points (e.g., 0, 5, 15, 30, 60 minutes).
- Cell Lysis: Wash cells with ice-cold PBS and lyse them directly on the plate with ice-cold lysis buffer. Scrape the cells, collect the lysate, and centrifuge at 14,000 rpm for 15 minutes at 4°C to pellet cell debris.

© 2026 BenchChem. All rights reserved.

- Protein Quantification: Determine the protein concentration of the supernatant using a BCA assay.
- SDS-PAGE: Normalize protein amounts (e.g., 20-30 µg per lane) and separate the proteins by size on an SDS-PAGE gel.
- Electrotransfer: Transfer the separated proteins from the gel to a PVDF or nitrocellulose membrane.
- Blocking and Antibody Incubation: Block the membrane with blocking buffer for 1 hour at room temperature. Incubate the membrane with the primary antibody (e.g., anti-phospho-Akt) overnight at 4°C, typically at a 1:1000 dilution in blocking buffer.
- Washing and Secondary Antibody: Wash the membrane three times with TBST. Incubate with the HRP-conjugated secondary antibody (1:5000 dilution) for 1 hour at room temperature.
- Detection: Wash the membrane again three times with TBST. Apply ECL substrate and visualize the protein bands using a chemiluminescence imaging system.
- Stripping and Re-probing: The membrane can be stripped and re-probed with an antibody for the total protein (e.g., anti-total-Akt) to confirm equal loading.
- Densitometry Analysis: Quantify the band intensity using software like ImageJ. Normalize the phosphorylated protein signal to the total protein signal.

Conclusion and Future Perspectives

The PAF/PAFR signaling axis is a critical mediator of oncogenic transformation and cancer progression. PAF agonist analogs can promote tumorigenesis by activating a network of well-established oncogenic pathways, including PI3K/Akt, MAPK/ERK, and STAT3.[1][8] Conversely, PAF antagonist analogs represent a promising therapeutic strategy, with demonstrated efficacy in preclinical models, both as monotherapies and in combination with conventional treatments like chemotherapy and radiation.[1][2][8]

Future research should focus on developing highly specific and potent PAFR antagonists with favorable pharmacokinetic profiles. Furthermore, identifying predictive biomarkers for PAFR

© 2026 BenchChem. All rights reserved.

pathway activation in patients could help select individuals most likely to respond to PAF-targeted therapies. A deeper understanding of the crosstalk between PAFR and other signaling pathways will be essential for designing rational combination therapies to overcome resistance and improve patient outcomes. The protocols and data presented in this guide offer a foundational framework for researchers to further explore this potent signaling axis in the context of drug discovery and development.

Need Custom Synthesis?

BenchChem offers custom synthesis for rare earth carbides and specific isotopiclabeling.

Email: info@benchchem.com or Request Quote Online.

References

- 1. Impact of targeting the platelet-activating factor and its receptor in cancer treatment - PMC [pmc.ncbi.nlm.nih.gov]
- 2. PAF receptor and tumor growth - PubMed [pubmed.ncbi.nlm.nih.gov]
- 3. Biochemistry of Platelet Activating Factor - StatPearls - NCBI Bookshelf [ncbi.nlm.nih.gov]
- 4. researchgate.net [researchgate.net]
- 5. imrpress.com [imrpress.com]
- 6. The Potential Role of Dietary Platelet-Activating Factor Inhibitors in Cancer Prevention and Treatment - PMC [pmc.ncbi.nlm.nih.gov]
- 7. researchgate.net [researchgate.net]
- 8. Platelet activating factor receptor antagonists improve the efficacy of experimental chemo- and radiotherapy | Clinics [elsevier.es]
- 9. Frontiers | New Insights Into the Pathologic Roles of the Platelet-Activating Factor System [frontiersin.org]
- To cite this document: BenchChem. [Exploring the Oncogenic Transformation Potential of PAF Analogs: A Technical Guide]. BenchChem, [2026]. [Online PDF]. Available at: [https://www.benchchem.com/product/b10767573/docs#exploring-the-oncogenic-transformation-potential-of-paf-analogs-a-technical-guide]

Disclaimer & Data Validity:

The information provided in this document is for Research Use Only (RUO) and is strictly not intended for diagnostic or therapeutic procedures. While BenchChem strives to provide accurate protocols, we make no warranties, express or implied, regarding the fitness of this product for every specific experimental setup.

Technical Support: The protocols provided are for reference purposes. Unsure if this reagent suits your experiment?

Need Industrial/Bulk Grade? Request Custom Synthesis Quote

BenchChem

Our mission is to be the trusted global source of essential and advanced chemicals, empowering scientists and researchers to drive progress in science and industry.

Contact

Address: 3281 E Guasti Rd

Ontario, CA 91761, United States

Phone: (601) 213-4426

Email: info@benchchem.com

Contact our Ph.D. Support Team for a compatibility check

© 2026 BenchChem. All rights reserved.