Technical Support Center: Overcoming Resistance to (R)-TAPI-2 in Cancer Cells

Author: BenchChem Technical Support Team. **Date**: April 2026

Compound of Interest

Compound Name: *(R)-TAPI-2*

Cat. No.: *B10766543*

Get Quote

This technical support center provides researchers, scientists, and drug development professionals with comprehensive troubleshooting guides and frequently asked questions (FAQs) for overcoming resistance to the ADAM17 inhibitor, **(R)-TAPI-2**, in cancer cells.

Frequently Asked Questions (FAQs)

Q1: What is **(R)-TAPI-2** and what is its mechanism of action?

(R)-TAPI-2 is a potent, broad-spectrum inhibitor of the A Disintegrin and Metalloproteinase (ADAM) family, with particularly strong activity against ADAM17, also known as Tumor Necrosis Factor-α Converting Enzyme (TACE).[1][2][3] As a hydroxamate-based inhibitor, its primary mechanism of action involves chelating the essential zinc ion within the catalytic domain of ADAM17.[4][5][6][7][8] This binding prevents the enzyme from cleaving and releasing the extracellular domains ("shedding") of its numerous transmembrane substrates.

Key substrates of ADAM17 include Tumor Necrosis Factor-α (TNF-α) and ligands for the Epidermal Growth Factor Receptor (EGFR), such as Transforming Growth Factor-α (TGF-α) and Amphiregulin (AREG).[1][9] By inhibiting the shedding of these factors, **(R)-TAPI-2** can block the activation of downstream pro-survival signaling pathways, including the EGFR/MAPK and Notch pathways, thereby reducing cancer cell proliferation, migration, and survival.[3][10]

© 2026 BenchChem. All rights reserved.

Q2: My cancer cell line is not responding to **(R)-TAPI-2** treatment. What are the potential reasons?

Several factors could contribute to a lack of response to **(R)-TAPI-2**:

- Low or absent ADAM17 expression: The target protein, ADAM17, may not be expressed at sufficient levels in your cell line of choice.
- Intrinsic resistance: The cancer cells may rely on signaling pathways that are independent of ADAM17 activity for their survival and proliferation.
- Acquired resistance: Cancer cells can develop resistance to ADAM17 inhibitors through various mechanisms, including the upregulation of bypass signaling pathways.[11]
- Experimental issues: Problems with the compound's stability, dosage, or the experimental setup can lead to apparent resistance.

Q3: What are the known or potential mechanisms of resistance to **(R)-TAPI-2**?

While specific resistance mechanisms to **(R)-TAPI-2** are not extensively documented, resistance to ADAM17 inhibitors, in general, can arise from:

- Activation of bypass signaling pathways: Cancer cells can compensate for ADAM17 inhibition by upregulating alternative survival pathways. This can include the activation of other receptor tyrosine kinases or downstream signaling molecules that are not dependent on ADAM17-mediated ligand shedding.[12][13]
- Upregulation of ADAM17 substrates: Increased expression of ADAM17 substrates, such as EGFR ligands, might overcome the inhibitory effect of **(R)-TAPI-2**.
- Alterations in the tumor microenvironment: Factors within the tumor microenvironment can contribute to drug resistance.[13]
- Drug efflux pumps: While less common for this class of inhibitors, overexpression of multidrug resistance pumps could potentially reduce the intracellular concentration of the compound.[14]

© 2026 BenchChem. All rights reserved.

- Mutations in the ADAM17 gene: Although not widely reported, mutations in the drug-binding site of ADAM17 could theoretically confer resistance.

Q4: How can I confirm that **(R)-TAPI-2** is active in my experimental system?

To verify the activity of **(R)-TAPI-2**, you should perform a positive control experiment. This typically involves stimulating cells with a known inducer of ADAM17 activity, such as Phorbol 12-myristate 13-acetate (PMA), and then treating with **(R)-TAPI-2**. You can then measure the shedding of a known ADAM17 substrate, like TNF-α or an EGFR ligand, using an ELISA. A significant reduction in substrate shedding in the presence of **(R)-TAPI-2** would confirm its activity.[2]

Troubleshooting Guides

Guide 1: Unexpectedly High Cell Viability After **(R)-TAPI-2** Treatment

This guide addresses scenarios where cancer cells show minimal or no reduction in viability after being treated with **(R)-TAPI-2**.

© 2026 BenchChem. All rights reserved.

Observation	Potential Cause	Recommended Action
No change in cell viability at expected effective concentrations.	1. Low ADAM17 Expression: The target cell line may not express sufficient levels of ADAM17. 2. Compound Inactivity: The (R)-TAPI-2 stock solution may have degraded. 3. Incorrect Dosing: The final concentration of (R)-TAPI-2 in the culture may be too low.	1. Verify ADAM17 Expression: Check ADAM17 mRNA and protein levels in your cell line using qPCR, Western blot, or consult databases like The Human Protein Atlas.[15][16][17][18] 2. Confirm Compound Activity: Test the compound on a sensitive, positive control cell line known to respond to ADAM17 inhibition. Prepare a fresh stock solution. 3. Perform Dose-Response Curve: Conduct a dose-response experiment to determine the IC50 of (R)-TAPI-2 for your specific cell line.
Initial response followed by a return to normal proliferation.	1. Development of Acquired Resistance: Cells may have adapted to the inhibitor over time. 2. Activation of Bypass Pathways: Inhibition of ADAM17 may lead to the compensatory activation of other pro-survival signaling pathways.	1. Analyze Resistant Cells: Perform Western blot analysis on lysates from treated cells to look for upregulation of p-EGFR, p-Akt, p-ERK, or Notch signaling components. 2. Combination Therapy: Consider combining (R)-TAPI-2 with inhibitors of the identified bypass pathways (e.g., EGFR inhibitors, PI3K/Akt inhibitors).
High variability between replicate wells.	1. Uneven Cell Seeding: Inconsistent cell numbers across wells. 2. Edge Effects: Evaporation from wells on the edge of the plate. 3. Inconsistent Drug Distribution:	1. Ensure Homogeneous Cell Suspension: Thoroughly mix the cell suspension before and during plating. 2. Minimize Edge Effects: Do not use the outer wells of the plate for

© 2026 BenchChem. All rights reserved.

	Poor mixing of the compound in the media.	experimental samples; fill them with sterile PBS or media. 3. Proper Mixing: Ensure the (R)-TAPI-2 solution is well-mixed into the culture medium before adding to the cells.

Experimental Protocols

Protocol 1: Generation of (R)-TAPI-2 Resistant Cancer Cell Lines

This protocol describes a common method for developing cancer cell lines with acquired resistance to **(R)-TAPI-2**.[19][20][21][22][23]

Materials:

- Parental cancer cell line of interest
- **(R)-TAPI-2**
- Complete cell culture medium
- Cell culture flasks and plates
- Cell counting apparatus (e.g., hemocytometer or automated cell counter)
- Cryopreservation medium

Methodology:

- Determine the IC50: Perform a cell viability assay (e.g., MTT or CellTiter-Glo) to determine the half-maximal inhibitory concentration (IC50) of **(R)-TAPI-2** for the parental cell line.
- Initial Drug Exposure: Culture the parental cells in medium containing **(R)-TAPI-2** at a concentration equal to the IC20 (the concentration that inhibits 20% of cell growth).

© 2026 BenchChem. All rights reserved.

- Stepwise Dose Escalation: Once the cells have adapted and are proliferating at a normal rate (typically after 2-3 passages), increase the concentration of **(R)-TAPI-2** by approximately 50%.
- Monitor and Passage: Continuously monitor the cells for signs of toxicity. Passage the cells when they reach 70-80% confluency. If significant cell death occurs, maintain the cells at the current drug concentration for additional passages before attempting to increase it again.
- Cryopreserve at Intervals: At each successful dose escalation, freeze a stock of the resistant cells. This provides a backup at various stages of resistance.
- Establish a Stable Resistant Line: Continue the dose escalation until the cells are able to proliferate in a concentration of **(R)-TAPI-2** that is significantly higher than the initial IC50 (e.g., 5-10 fold higher).
- Characterize the Resistant Phenotype: Once a stable resistant cell line is established, confirm the level of resistance by re-evaluating the IC50 of **(R)-TAPI-2**. The resistant cells should be maintained in a medium containing a maintenance dose of **(R)-TAPI-2**.

Protocol 2: Western Blot Analysis of Pro-Survival Signaling Pathways

This protocol is for assessing the activation state of key signaling pathways that may be involved in resistance to **(R)-TAPI-2**.

Materials:

- Parental and **(R)-TAPI-2** resistant cancer cell lines
- **(R)-TAPI-2**
- Lysis buffer (e.g., RIPA buffer) with protease and phosphatase inhibitors
- Protein quantification assay (e.g., BCA assay)
- SDS-PAGE gels and running buffer

© 2026 BenchChem. All rights reserved.

- Transfer buffer and membranes (PVDF or nitrocellulose)
- Blocking buffer (e.g., 5% non-fat milk or BSA in TBST)
- Primary antibodies (e.g., anti-p-EGFR, anti-EGFR, anti-p-Akt, anti-Akt, anti-p-ERK, anti-ERK, anti-Notch1-ICD, anti-GAPDH)
- HRP-conjugated secondary antibodies
- Chemiluminescent substrate

Methodology:

- Cell Lysis: Treat parental and resistant cells with or without **(R)-TAPI-2** for the desired time. Wash cells with ice-cold PBS and lyse with lysis buffer.
- Protein Quantification: Determine the protein concentration of each lysate using a BCA assay.
- SDS-PAGE: Denature equal amounts of protein from each sample by boiling in Laemmli buffer. Separate the proteins by SDS-PAGE.
- Protein Transfer: Transfer the separated proteins to a PVDF or nitrocellulose membrane.
- Blocking: Block the membrane with blocking buffer for 1 hour at room temperature.
- Primary Antibody Incubation: Incubate the membrane with the primary antibody of interest overnight at 4°C.
- Secondary Antibody Incubation: Wash the membrane and incubate with the appropriate HRP-conjugated secondary antibody for 1 hour at room temperature.
- Detection: Wash the membrane and add the chemiluminescent substrate. Visualize the protein bands using a chemiluminescence imaging system.
- Analysis: Quantify the band intensities and normalize to a loading control (e.g., GAPDH or total protein).

© 2026 BenchChem. All rights reserved.

Protocol 3: ELISA for Measuring Shedding of ADAM17 Substrates (e.g., TNF-α or EGFR Ligands)

This protocol provides a method to quantify the shedding of ADAM17 substrates, which is a direct measure of ADAM17 activity.[9][24][25][26][27][28][29]

Materials:

- Cancer cell line of interest
- **(R)-TAPI-2**
- PMA (Phorbol 12-myristate 13-acetate) for stimulation (optional, as a positive control for shedding)
- Serum-free cell culture medium
- ELISA kit for the specific substrate (e.g., human TNF-α or human Amphiregulin)
- 96-well plates
- Microplate reader

Methodology:

- Cell Seeding: Seed cells in a 96-well plate and allow them to adhere overnight.
- Serum Starvation: Replace the growth medium with serum-free medium and incubate for 2-4 hours.
- Inhibitor Treatment: Pre-treat the cells with various concentrations of **(R)-TAPI-2** for 1 hour.
- Stimulation (Optional): Add PMA to the wells to stimulate ADAM17-mediated shedding. Include a non-stimulated control.
- Incubation: Incubate the plate for the desired time (e.g., 1-4 hours) at 37°C.
- Collect Supernatant: Carefully collect the cell culture supernatant from each well.

© 2026 BenchChem. All rights reserved.

- ELISA: Perform the ELISA according to the manufacturer's instructions for the specific substrate being measured.
- Data Analysis: Generate a standard curve and determine the concentration of the shed substrate in each sample.

Visualizations

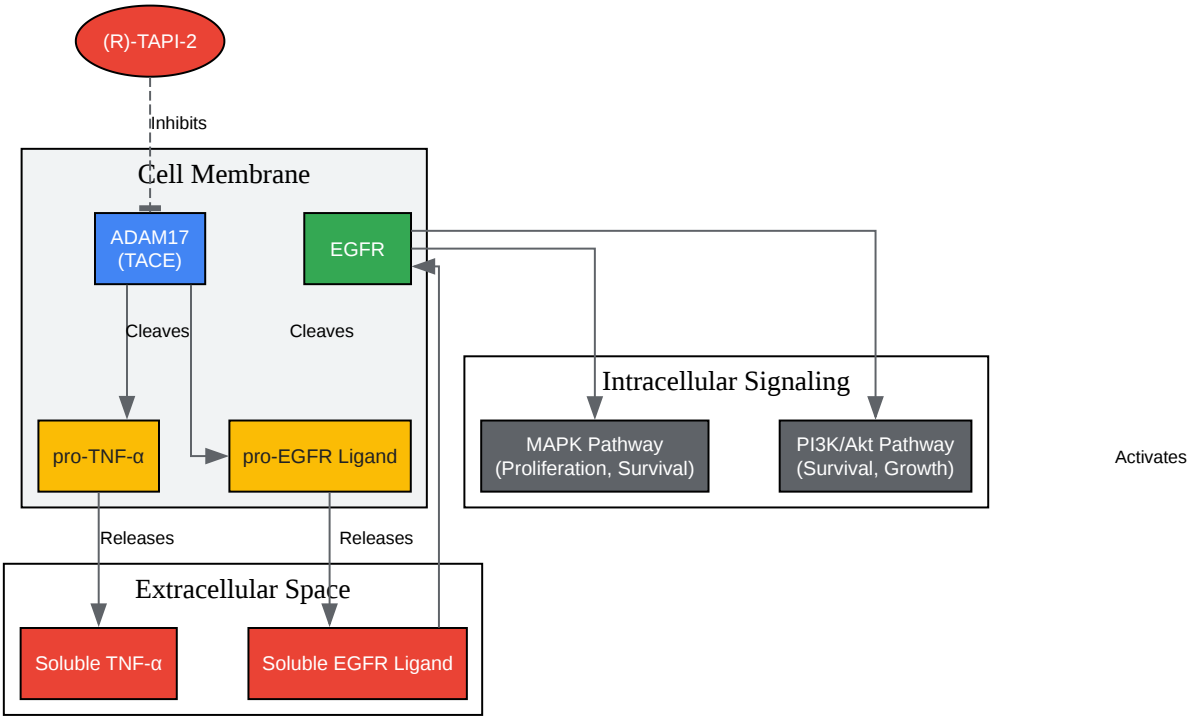

Click to download full resolution via product page

Caption: Mechanism of action of **(R)-TAPI-2** and its effect on downstream signaling.

© 2026 BenchChem. All rights reserved.

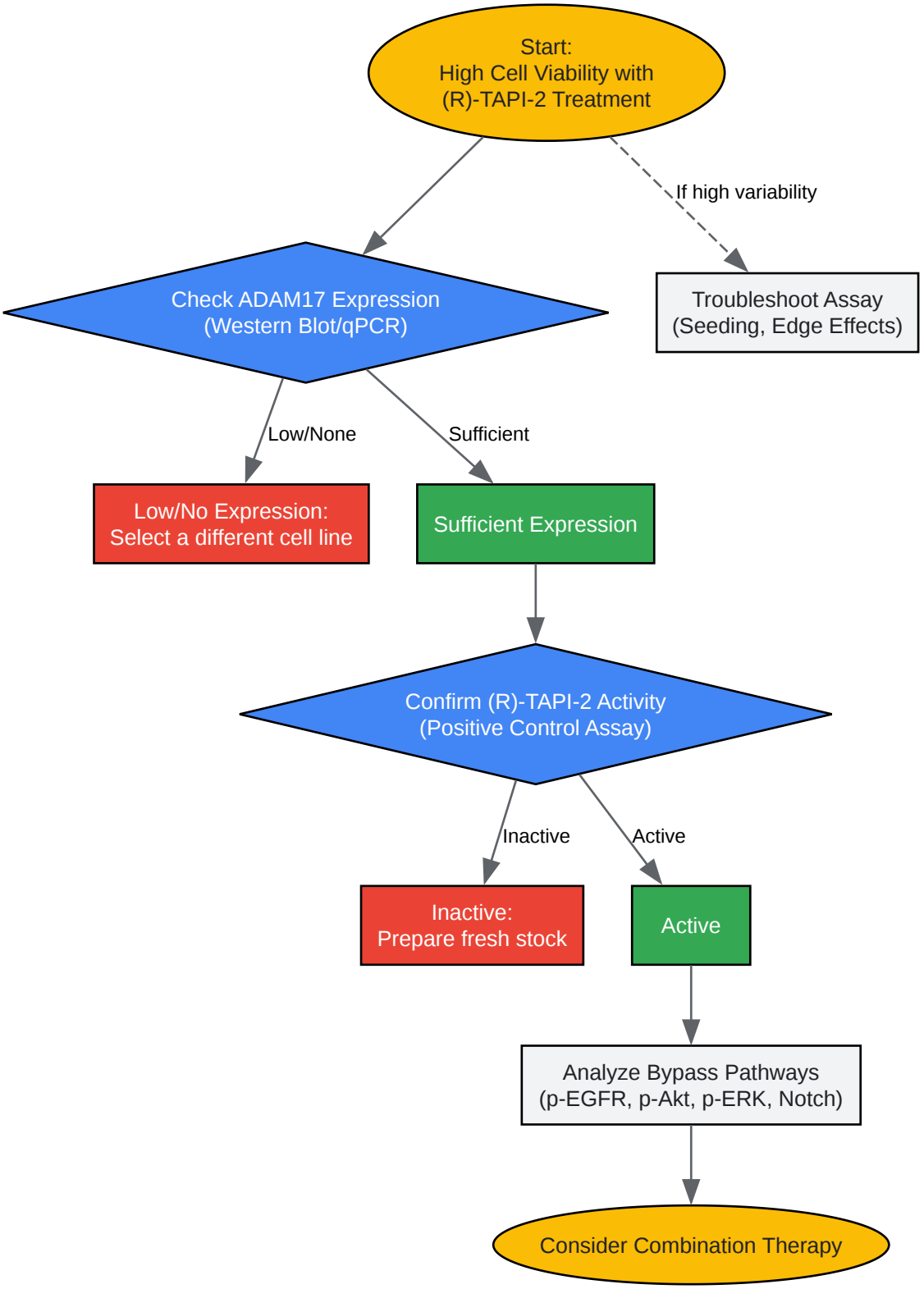

Click to download full resolution via product page

Caption: Troubleshooting workflow for unexpected high cell viability.

© 2026 BenchChem. All rights reserved.

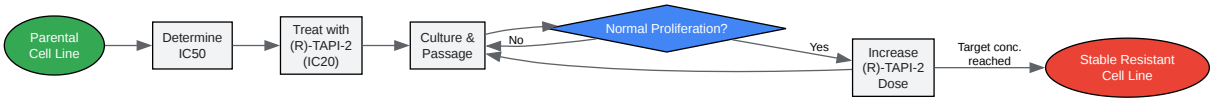

Click to download full resolution via product page

Caption: Experimental workflow for generating resistant cell lines.

Need Custom Synthesis?

BenchChem offers custom synthesis for rare earth carbides and specific isotopiclabeling.

Email: info@benchchem.com or Request Quote Online.

References

- 1. TAPI-2 | ADAM17 inhibitor | Probechem Biochemicals [probechem.com]
- 2. TAPI-2, MMP and ADAM inhibitor (CAS 689284-12-6) | Abcam [abcam.com]
- 3. medchemexpress.com [medchemexpress.com]
- 4. Structure-based rational design of peptide hydroxamic acid inhibitors to target tumor necrosis factor-α converting enzyme as potential therapeutics for hepatitis - PubMed [pubmed.ncbi.nlm.nih.gov]
- 5. Frontiers | ADAM17 as a promising therapeutic target: from structural basis to inhibitor discovery in human diseases [frontiersin.org]
- 6. Hydroxamate-based peptide inhibitors of matrix metalloprotease 2 - PubMed [pubmed.ncbi.nlm.nih.gov]
- 7. Hydroxamic acids as matrix metalloproteinase inhibitors - PubMed [pubmed.ncbi.nlm.nih.gov]
- 8. researchgate.net [researchgate.net]
- 9. JCI - Targeting TACE-dependent EGFR ligand shedding in breast cancer [jci.org]
- 10. Frontiers | Novel structured ADAM17 small-molecule inhibitor represses ADAM17/Notch pathway activation and the NSCLC cells' resistance to anti-tumour drugs [frontiersin.org]

© 2026 BenchChem. All rights reserved.

- 11. Chemotherapy-induced activation of ADAM-17: a novel mechanism of drug resistance in colorectal cancer - PMC [pmc.ncbi.nlm.nih.gov]
- 12. Recent Advances in ADAM17 Research: A Promising Target for Cancer and Inflammation - PMC [pmc.ncbi.nlm.nih.gov]
- 13. Understanding and targeting resistance mechanisms in cancer - PMC [pmc.ncbi.nlm.nih.gov]
- 14. Mechanisms regulating resistance to inhibitors of topoisomerase II - PubMed [pubmed.ncbi.nlm.nih.gov]
- 15. Expression of ADAM17 in cancer - Summary - The Human Protein Atlas [proteinatlas.org]
- 16. Cell line - ADAM17 - The Human Protein Atlas [proteinatlas.org]
- 17. researchgate.net [researchgate.net]
- 18. ADAM17 protein expression summary - The Human Protein Atlas [proteinatlas.org]
- 19. researchgate.net [researchgate.net]
- 20. researchgate.net [researchgate.net]
- 21. researchgate.net [researchgate.net]
- 22. Drug-resistant Cell Lines—Crack the Survival Code of Cancer Cells and Overcome Treatment Barriers [procellsystem.com]
- 23. Development of Drug-resistant Cell Lines for Experimental Procedures - PMC [pmc.ncbi.nlm.nih.gov]
- 24. Ectodomain shedding of EGFR ligands serves as an activation readout for TRP channels - PMC [pmc.ncbi.nlm.nih.gov]
- 25. Ectodomain Shedding of Epidermal Growth Factor Receptor Ligands Is Required for Keratinocyte Migration in Cutaneous Wound Healing - PMC [pmc.ncbi.nlm.nih.gov]
- 26. novamedline.com [novamedline.com]
- 27. documents.thermofisher.com [documents.thermofisher.com]
- 28. researchgate.net [researchgate.net]
- 29. JCI Insight - ADAM17-mediated EGFR ligand shedding directs macrophage-promoted cancer cell invasion [insight.jci.org]

- To cite this document: BenchChem. [Technical Support Center: Overcoming Resistance to (R)-TAPI-2 in Cancer Cells]. BenchChem, [2026]. [Online PDF]. Available at:

© 2026 BenchChem. All rights reserved.

[https://www.benchchem.com/product/b10766543/docs#technical-support-center-overcoming-resistance-to-r-tapi-2-in-cancer-cells]

Disclaimer & Data Validity:

The information provided in this document is for Research Use Only (RUO) and is strictly not intended for diagnostic or therapeutic procedures. While BenchChem strives to provide accurate protocols, we make no warranties, express or implied, regarding the fitness of this product for every specific experimental setup.

Technical Support: The protocols provided are for reference purposes. Unsure if this reagent suits your experiment?

Need Industrial/Bulk Grade? Request Custom Synthesis Quote

BenchChem

Our mission is to be the trusted global source of essential and advanced chemicals, empowering scientists and researchers to drive progress in science and industry.

Contact

Address: 3281 E Guasti Rd

Ontario, CA 91761, United States

Phone: (601) 213-4426

Email: info@benchchem.com

Contact our Ph.D. Support Team for a compatibility check