Troubleshooting unexpected results in Maraviroc experiments

Author: BenchChem Technical Support Team. **Date**: April 2026

Compound of Interest

Compound Name:	*Maraviroc*
CAS No.:	*2414315-81-2*
Cat. No.:	*B10761220*

Get Quote

Technical Support Center: Maraviroc Experiments

This technical support center provides troubleshooting guidance and frequently asked questions (FAQs) for researchers, scientists, and drug development professionals working with **Maraviroc**. The information is presented in a question-and-answer format to directly address common issues encountered during in vitro and in vivo experiments.

Troubleshooting Guides

Issue 1: Higher than Expected IC50 Values or Reduced Potency

Question: We are observing higher than expected IC50 values for **Maraviroc** in our viral entry assay. What are the potential causes and how can we troubleshoot this?

Answer: Higher than expected IC50 values, indicating reduced potency of **Maraviroc**, can stem from several factors related to the virus, the cells, or the assay conditions.

© 2026 BenchChem. All rights reserved.

Possible Causes & Troubleshooting Steps:

- Viral Tropism: **Maraviroc** is only effective against CCR5-tropic (R5-tropic) HIV-1 strains.[1][2][3][4][5] The presence of CXCR4-tropic (X4-tropic) or dual/mixed-tropic virus in your viral stock will lead to incomplete inhibition and an artificially high IC50.
  - Recommendation: Confirm the tropism of your viral stock using a highly sensitive tropism assay before initiating experiments.[5][6][7][8][9] Both genotypic and phenotypic assays are available.[6][7][8]
- Pre-existing Resistance: Natural resistance to **Maraviroc** in treatment-naive patients is possible, although rare.[10] This can be due to mutations in the V3 loop of the gp120 envelope protein that allow the virus to use the **Maraviroc**-bound CCR5 co-receptor for entry.[11][12]
  - Recommendation: If you suspect pre-existing resistance, sequence the V3 loop of your viral isolate to identify any known resistance-associated mutations.[13]
- Assay Conditions: Suboptimal assay conditions can affect **Maraviroc**'s performance.
  - Cell Density: Ensure you have an optimal cell density for your assay. Both too low and too high cell counts can impact results.[14]
  - Incubation Time: The duration of drug exposure can influence the IC50 value. A longer incubation period may result in a lower apparent IC50.[15]
  - Reagent Quality: Verify the quality and concentration of all reagents, including the **Maraviroc** stock solution.

Data Summary: Expected **Maraviroc** IC50 and IC90 Values

© 2026 BenchChem. All rights reserved.

Parameter	Cell Type	Virus Strain	Typical Range (nM)	Reference
IC50	PBMCs	HIV-1 Ba-L	0.36 - 0.9	[16]
IC50	U87.CD4.CCR5 cells	HIV-1 Primary Isolates (Subtypes A, B, C, D)	6.6 - 50.3	[17][18]
IC90	Pseudotyped Viruses	Various	13.7 (geometric mean)	[19]
IC90	Various	Various	5.74 - 103 ng/mL (equivalent to 11.2 - 200.5 nM)	[20]

Issue 2: Incomplete Viral Inhibition (Plateau Effect)

Question: Our dose-response curve for **Maraviroc** shows a plateau, and we are unable to achieve 100% viral inhibition even at high concentrations. What does this indicate?

Answer: An incomplete dose-response curve with an inhibition plateau below 100% is a key indicator of **Maraviroc** resistance.[21] This "plateau effect" suggests that a portion of the viral population can still enter cells despite the presence of the drug.[11]

Primary Mechanisms:

- Emergence of CXCR4-tropic Virus: **Maraviroc** exerts selective pressure that can lead to the outgrowth of pre-existing, low-level CXCR4-using viruses that are not inhibited by the drug.[2][21]
- Use of Inhibitor-Bound CCR5: Resistant R5-tropic viruses can acquire mutations, primarily in the V3 loop of gp120, that enable them to recognize and use the conformation of the CCR5 receptor even when it is bound by **Maraviroc**.[10][11][12]

Troubleshooting and Confirmation:

© 2026 BenchChem. All rights reserved.

- Tropism Testing of Post-Assay Virus: Perform a tropism assay on the virus that breaks through at high **Maraviroc** concentrations. A shift from R5 to X4 or dual/mixed tropism would confirm the emergence of a CXCR4-using population.[7][10]

- Sequence Analysis: Sequence the envelope gene (env) of the breakthrough virus to identify mutations associated with **Maraviroc** resistance.[13]

Issue 3: High Background or Cytotoxicity in Cell-Based Assays

Question: We are observing high background signal or signs of cytotoxicity in our control wells, which is interfering with our **Maraviroc** experiment results. How can we address this?

Answer: High background or cytotoxicity can obscure the specific effects of **Maraviroc**. It's crucial to distinguish between non-specific effects and drug-induced cytotoxicity.

Troubleshooting Steps:

- Optimize Cell Seeding Density: Too high a cell density can lead to nutrient depletion and cell death, increasing background signals.[14] Perform a cell titration experiment to determine the optimal cell number for your assay plate format and incubation time.

- Gentle Cell Handling: Excessive or forceful pipetting during cell seeding and reagent addition can cause cell damage and membrane lysis.[14]

- Assess **Maraviroc** Cytotoxicity: While **Maraviroc** generally has a favorable safety profile, it's good practice to determine its cytotoxic concentration in your specific cell line.[22]

    - Recommendation: Run a separate cytotoxicity assay (e.g., using a membrane-impermeable dye) with a range of **Maraviroc** concentrations to identify the concentration at which it becomes toxic to your cells.[14]

- Media and Serum Quality: Ensure the cell culture medium and serum are not contaminated and are of high quality. Components in the medium can sometimes contribute to high background absorbance.[14]

Experimental Workflow: Troubleshooting High Background

© 2026 BenchChem. All rights reserved.

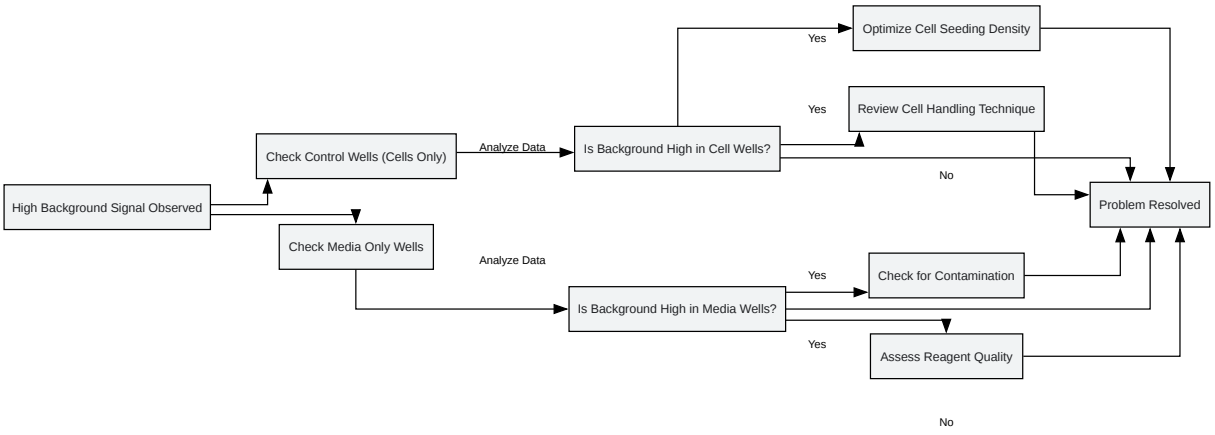

Click to download full resolution via product page

Caption: Troubleshooting workflow for high background signals.

Frequently Asked Questions (FAQs)

Q1: What is the mechanism of action of **Maraviroc**?

A1: **Maraviroc** is a CCR5 co-receptor antagonist.[1][4] It selectively and reversibly binds to the CCR5 co-receptor on the surface of CD4+ T-cells.[1][11] This binding prevents the interaction between the viral envelope glycoprotein gp120 and the CCR5 co-receptor, which is a necessary step for the entry of R5-tropic HIV-1 into the host cell.[1][4]

Signaling Pathway: **Maraviroc** Mechanism of Action

© 2026 BenchChem. All rights reserved.

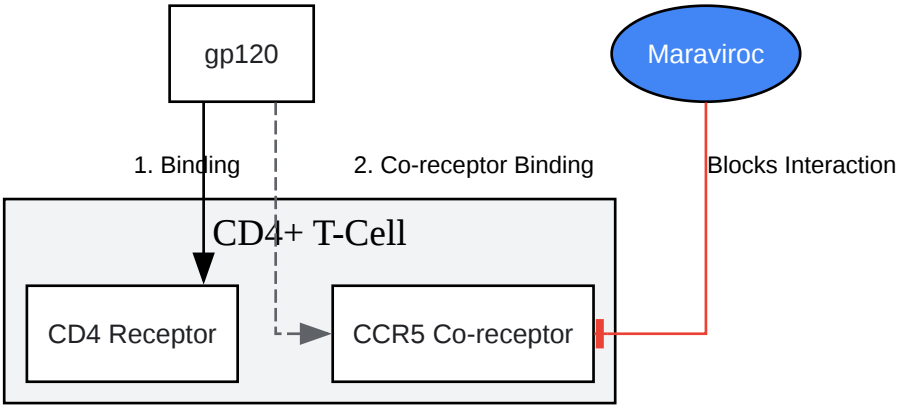

Click to download full resolution via product page

Caption: **Maraviroc** blocks HIV-1 entry by binding to CCR5.

Q2: Is it necessary to perform a tropism test before using **Maraviroc** in an experiment?

A2: Yes, it is mandatory to determine the viral tropism before initiating therapy or experiments with **Maraviroc**.[5][6][12] **Maraviroc** is only effective against CCR5-tropic HIV-1.[5] Using it against CXCR4-tropic or dual/mixed-tropic viruses will result in treatment failure or inconclusive experimental results.[3][6] Highly sensitive tropism assays are recommended to detect even low levels of CXCR4-using viruses.[6]

Logical Relationship: Decision for **Maraviroc** Use

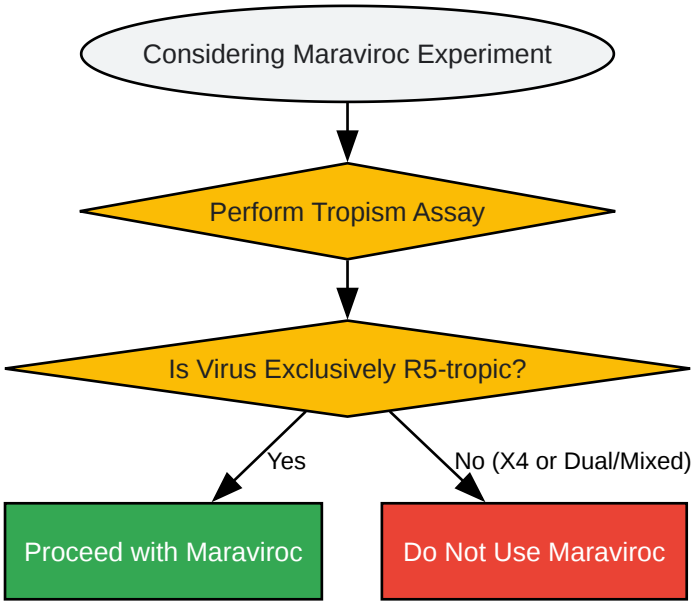

© 2026 BenchChem. All rights reserved.

Click to download full resolution via product page

Caption: Decision tree for using **Maraviroc** based on viral tropism.

Q3: What are the main mechanisms of resistance to **Maraviroc**?

A3: There are two primary mechanisms of resistance to **Maraviroc**:

- Co-receptor Switching: The virus may switch from using the CCR5 co-receptor to the CXCR4 co-receptor for cell entry.[2] This is often due to the selection of pre-existing CXCR4-tropic viral variants.[21]
- Binding to Drug-Bound CCR5: The virus can develop mutations, particularly in the V3 loop of its gp120 envelope protein, that allow it to bind to the CCR5 co-receptor even when **Maraviroc** is present.[11][12]

Q4: Can **Maraviroc** interact with other compounds in my experiment?

A4: **Maraviroc** is a substrate of the cytochrome P450 enzyme CYP3A4.[1][6][23] Therefore, its metabolism can be affected by other compounds that are inhibitors or inducers of this enzyme.[11]

- CYP3A4 Inhibitors (e.g., ketoconazole, ritonavir) can increase **Maraviroc** concentrations.[11][23]
- CYP3A4 Inducers (e.g., rifampin, efavirenz) can decrease **Maraviroc** concentrations.[1][11]

It is important to consider these potential interactions when designing experiments involving co-administration of other drugs.

Data Summary: Drug Interactions with **Maraviroc**

© 2026 BenchChem. All rights reserved.

Interacting Drug Class	Example Drugs	Effect on Maraviroc Concentration
Potent CYP3A4 Inhibitors	Ketoconazole, Ritonavir, Saquinavir	Increased
CYP3A4 Inducers	Rifampin, Efavirenz, Carbamazepine	Decreased
P-glycoprotein (Pgp) Inhibitors	Ritonavir	Increased

Experimental Protocols

Protocol 1: **Maraviroc** Susceptibility Assay using Pseudovirus

This protocol outlines a general procedure for determining the susceptibility of HIV-1 pseudoviruses to **Maraviroc**.

Materials:

- HEK293T cells
- HIV-1 envelope-expressing plasmid
- HIV-1 backbone plasmid (env-deleted, luciferase reporter)
- Transfection reagent
- U87.CD4.CCR5 target cells
- **Maraviroc** stock solution (in DMSO)
- Cell culture medium (DMEM with 10% FBS and antibiotics)
- Luciferase assay reagent
- 96-well white, clear-bottom assay plates

© 2026 BenchChem. All rights reserved.

- Luminometer

Methodology:

- Pseudovirus Production:
  - Co-transfect HEK293T cells with the HIV-1 envelope-expressing plasmid and the HIV-1 backbone plasmid using a suitable transfection reagent.
  - Incubate for 48-72 hours.
  - Harvest the supernatant containing the pseudovirus and filter through a 0.45 µm filter.
  - Determine the viral titer (e.g., by p24 ELISA or by titrating on target cells).
- **Maraviroc** Dilution:
  - Prepare a serial dilution of **Maraviroc** in cell culture medium. The final DMSO concentration should be kept constant and low (e.g., <0.1%).
- Infection:
  - Seed U87.CD4.CCR5 cells in a 96-well plate at a predetermined optimal density.
  - Add the diluted **Maraviroc** to the wells.
  - Add a standardized amount of pseudovirus to each well.
  - Include control wells: virus only (no drug) and cells only (no virus, no drug).
- Incubation:
  - Incubate the plates for 48-72 hours at 37°C in a CO2 incubator.
- Luciferase Assay:
  - Remove the supernatant from the wells.

© 2026 BenchChem. All rights reserved.

- Lyse the cells and add the luciferase assay reagent according to the manufacturer's instructions.
- Measure the luminescence using a luminometer.

- Data Analysis:
  - Normalize the data to the virus-only control (100% infection).
  - Plot the percentage of inhibition against the **Maraviroc** concentration.
  - Calculate the IC50 value using a non-linear regression curve fit.[15]

Protocol 2: CCR5 Tropism Assay (Phenotypic)

This protocol provides a simplified overview of a phenotypic tropism assay.

Principle: This assay uses replication-defective laboratory viruses carrying the envelope proteins from the patient's viral sample to infect target cells expressing either CCR5 or CXCR4. [6]

Methodology:

- Sample Preparation:
  - Isolate viral RNA from plasma or proviral DNA from cells.
- Generation of Pseudovirus:
  - Amplify the patient's viral envelope gene (gp160).
  - Clone the amplified envelope gene into an expression vector.
  - Co-transfect HEK293T cells with the envelope expression vector and an HIV-1 backbone vector to produce pseudoviruses.
- Infection of Target Cells:
  - Prepare two sets of target cells (e.g., U87.CD4) expressing either CCR5 or CXCR4.

© 2026 BenchChem. All rights reserved.

- Infect each cell line with the generated pseudovirus.

- Readout:
  - After 48-72 hours, measure the reporter gene expression (e.g., luciferase) in both cell lines.

- Interpretation:
  - R5-tropic: Luciferase activity is detected only in CCR5-expressing cells.
  - X4-tropic: Luciferase activity is detected only in CXCR4-expressing cells.
  - Dual/Mixed-tropic: Luciferase activity is detected in both cell lines.[24]

Need Custom Synthesis?

BenchChem offers custom synthesis for rare earth carbides and specific isotopiclabeling.

Email: info@benchchem.com or Request Quote Online.

References

- 1. Maraviroc - Mechanism, Indication, Contraindications, Dosing, Adverse Effect, Interaction, Hepatic Dose | Drug Index | Pediatric Oncall [pediatriconcall.com]
- 2. Profile of maraviroc: a CCR5 antagonist in the management of treatment-experienced HIV patients - PMC [pmc.ncbi.nlm.nih.gov]
- 3. go.drugbank.com [go.drugbank.com]
- 4. What is the mechanism of Maraviroc? [synapse.patsnap.com]
- 5. ldh.la.gov [ldh.la.gov]
- 6. Maraviroc Therapy and CCR5 Genotype - Medical Genetics Summaries - NCBI Bookshelf [ncbi.nlm.nih.gov]
- 7. hiv.guidelines.org.au [hiv.guidelines.org.au]
- 8. clinicalinfo.hiv.gov [clinicalinfo.hiv.gov]
- 9. HIV-1 tropism testing and clinical management of CCR5 antagonists: Quebec review and recommendations - PMC [pmc.ncbi.nlm.nih.gov]

© 2026 BenchChem. All rights reserved.

- 10. Reduced Maximal Inhibition in Phenotypic Susceptibility Assays Indicates that Viral Strains Resistant to the CCR5 Antagonist Maraviroc Utilize Inhibitor-Bound Receptor for Entry - PMC [pmc.ncbi.nlm.nih.gov]
- 11. academic.oup.com [academic.oup.com]
- 12. Chemokine Receptor CCR5 Antagonist Maraviroc: Medicinal Chemistry and Clinical Applications - PMC [pmc.ncbi.nlm.nih.gov]
- 13. Maraviroc Analysis Highlights Difficulties in Defining Resistance [natap.org]
- 14. Cytotoxicity Assay Protocol & Troubleshooting - Creative Biolabs [creativebiolabs.net]
- 15. clyte.tech [clyte.tech]
- 16. researchgate.net [researchgate.net]
- 17. academic.oup.com [academic.oup.com]
- 18. researchgate.net [researchgate.net]
- 19. selleckchem.com [selleckchem.com]
- 20. home.iitm.ac.in [home.iitm.ac.in]
- 21. researchgate.net [researchgate.net]
- 22. Two-Year Safety and Virologic Efficacy of Maraviroc in Treatment-Experienced Patients With CCR5-Tropic HIV-1 Infection: 96-Week Combined Analysis of MOTIVATE 1 and 2 - PMC [pmc.ncbi.nlm.nih.gov]
- 23. Maraviroc: in vitro assessment of drug–drug interaction potential - PMC [pmc.ncbi.nlm.nih.gov]
- 24. monograbio.labcorp.com [monograbio.labcorp.com]

- To cite this document: BenchChem. [Troubleshooting unexpected results in Maraviroc experiments]. BenchChem, [2026]. [Online PDF]. Available at: [https://www.benchchem.com/product/b10761220/docs#troubleshooting-unexpected-results-in-maraviroc-experiments]

Disclaimer & Data Validity:

The information provided in this document is for Research Use Only (RUO) and is strictly not intended for diagnostic or therapeutic procedures. While BenchChem strives to provide accurate protocols, we make no warranties, express or implied, regarding the fitness of this product for every specific experimental setup.

© 2026 BenchChem. All rights reserved.

Technical Support: The protocols provided are for reference purposes. Unsure if this reagent suits your experiment?

Need Industrial/Bulk Grade? Request Custom Synthesis Quote

BenchChem

Our mission is to be the trusted global source of essential and advanced chemicals, empowering scientists and researchers to drive progress in science and industry.

Contact

Address: 3281 E Guasti Rd

Ontario, CA 91761, United States

Phone: (601) 213-4426

Email: info@benchchem.com

Contact our Ph.D. Support Team for a compatibility check

© 2026 BenchChem. All rights reserved.