Validating the Mechanism of Action of Pyrimidine-Derived Compounds: A Comparative Guide

Author: BenchChem Technical Support Team. **Date**: May 2026

Compound of Interest

Compound Name:	*4-Hydroxy-5-methylpyrimidine*
CAS No.:	*17758-52-0*
Cat. No.:	*B101695*

Get Quote

For Researchers, Scientists, and Drug Development Professionals

This guide provides a comparative analysis of pyrimidine-derived compounds, with a focus on validating their mechanism of action as potential therapeutic agents. While direct kinase inhibition data for **4-Hydroxy-5-methylpyrimidine** derivatives is limited in publicly available literature, this guide will use closely related 5-hydroxymethylpyrimidine derivatives as a primary example to illustrate the validation process for their observed cytotoxic effects. We will compare their performance with established and experimental kinase inhibitors and provide detailed experimental protocols for key validation assays.

Comparative Performance of Pyrimidine Derivatives

The therapeutic potential of pyrimidine derivatives often lies in their ability to inhibit key cellular processes, such as cell proliferation, frequently through the inhibition of protein kinases. The following tables summarize the cytotoxic activity of representative 5-hydroxymethylpyrimidine derivatives against various cancer cell lines and compare them with known kinase inhibitors.

© 2026 BenchChem. All rights reserved.

Table 1: Cytotoxic Activity (IC50, µM) of 5-Hydroxymethylpyrimidine Derivatives

Compound	HeLa (Cervical Cancer)	HepaRG (Liver Cancer)	Caco-2 (Colon Cancer)	AGS (Gastric Cancer)	A172 (Glioblastoma)
Derivative with 4-benzylsulfanyl group	Moderate Activity	Moderate Activity	Moderate Activity	Moderate Activity	Moderate Activity
Derivative with aliphatic amino group	Lower Activity	Lower Activity	Lower Activity	Lower Activity	Lower Activity

Note: Specific IC50 values for these compounds are described as being in the moderate range (17–38 µM) for the benzylsulfanyl derivative and generally less toxic for the aliphatic amino derivatives in the cited literature. For precise comparative analysis, specific IC50 values from dedicated dose-response studies would be required.

Table 2: Comparative IC50 Values of Alternative Kinase Inhibitors

Compound	Target Kinase(s)	A549 (Lung Cancer)	H1975 (Lung Cancer)	MCF-7 (Breast Cancer)
Erlotinib	EGFR	1.12 µM	-	5.27 µM
Compound 13a (Thiapyran-pyrimidine derivative)	EGFRT790M/L858R	Similar to Olmutinib	Similar to Olmutinib	-
Compound 10b (Pyrimidine-5-carbonitrile derivative)	EGFR	5.85 µM	-	7.68 µM

© 2026 BenchChem. All rights reserved.

Validating the Mechanism of Action: Key Experimental Protocols

To elucidate the mechanism of action of novel pyrimidine derivatives, a series of biochemical and cell-based assays are essential. Below are detailed protocols for key experiments to assess their potential as kinase inhibitors.

In Vitro Kinase Inhibition Assay (Luminescence-Based)

This assay determines the direct inhibitory effect of a compound on the activity of a specific kinase. It measures the amount of ATP remaining after the kinase reaction; a higher luminescence signal indicates greater inhibition.

Materials:

- Kinase of interest (e.g., EGFR, JAK2)
- Kinase substrate peptide
- ATP
- Test compounds (dissolved in DMSO)
- Kinase Assay Buffer (e.g., 40 mM Tris pH 7.5, 20 mM MgCl2, 0.1 mg/ml BSA)
- Luminescence-based ATP detection kit (e.g., Kinase-Glo®)
- White, opaque 384-well plates
- Multichannel pipettor
- Luminometer

Protocol:

- Compound Preparation: Prepare a 10-point, 3-fold serial dilution of the test compounds in DMSO.

© 2026 BenchChem. All rights reserved.

- Assay Plate Preparation: Dispense a small volume (e.g., 1 µL) of the diluted compounds into the wells of a 384-well plate. Include DMSO-only wells as a negative control and a known inhibitor as a positive control.
- Kinase Reaction:
  - Prepare a kinase reaction mixture containing the kinase and its specific substrate in the kinase assay buffer.
  - Add the kinase reaction mixture to the wells containing the compounds.
  - Initiate the reaction by adding ATP to each well.
- Incubation: Incubate the plate at 30°C for 60 minutes.
- Signal Detection:
  - Add an equal volume of the ATP detection reagent (e.g., Kinase-Glo®) to each well.
  - Incubate at room temperature for 10 minutes to stabilize the luminescent signal.
- Data Acquisition: Measure the luminescence of each well using a luminometer.
- Data Analysis: Plot the luminescence signal against the logarithm of the inhibitor concentration and fit the data to a dose-response curve to determine the IC50 value.

Cell Proliferation Assay (MTT Assay)

This assay assesses the effect of a compound on the metabolic activity of cells, which is an indicator of cell viability and proliferation.

Materials:

- Cancer cell lines (e.g., A549, MCF-7)
- Complete growth medium
- Test compounds (dissolved in DMSO)

© 2026 BenchChem. All rights reserved.

- MTT (3-(4,5-dimethylthiazol-2-yl)-2,5-diphenyltetrazolium bromide) solution (5 mg/mL in PBS)
- Solubilization solution (e.g., DMSO or a solution of 10 mM Tris base)
- 96-well plates
- Microplate reader

Protocol:

- Cell Seeding: Seed cells into 96-well plates at a density of 5,000-10,000 cells per well and incubate for 24 hours.
- Compound Treatment: Treat the cells with serial dilutions of the test compounds and incubate for 48-72 hours.
- MTT Addition: Add 10 µL of MTT solution to each well and incubate for 4 hours at 37°C.
- Formazan Solubilization: Add 100 µL of the solubilization solution to each well and incubate overnight to dissolve the formazan crystals.[1]
- Absorbance Measurement: Measure the absorbance at a wavelength between 550 and 600 nm using a microplate reader.[1]
- Data Analysis: Calculate the percentage of cell viability relative to the untreated control and determine the IC50 value.

Cell Cycle Analysis (Propidium Iodide Staining and Flow Cytometry)

This method is used to determine the distribution of cells in the different phases of the cell cycle (G0/G1, S, and G2/M) after treatment with a compound.

Materials:

- Cancer cell lines

© 2026 BenchChem. All rights reserved.

- Test compounds
- Phosphate-buffered saline (PBS)
- 70% Ethanol (ice-cold)
- Propidium Iodide (PI) staining solution (containing RNase A)
- Flow cytometer

Protocol:

- Cell Treatment: Treat cells with the test compound at its IC50 concentration for 24-48 hours.
- Cell Harvesting: Harvest both adherent and floating cells and wash with PBS.
- Fixation: Resuspend the cell pellet in ice-cold 70% ethanol while vortexing gently and fix overnight at -20°C.
- Staining:
  - Wash the fixed cells with PBS.
  - Resuspend the cell pellet in PI staining solution.
- Incubation: Incubate the cells in the dark at room temperature for 30 minutes.[2]
- Flow Cytometry: Analyze the DNA content of the cells using a flow cytometer.[3]
- Data Analysis: Quantify the percentage of cells in each phase of the cell cycle.

Visualizing Signaling Pathways and Experimental Workflows

Diagrams are crucial for understanding the complex interactions within signaling pathways and the logical flow of experimental procedures.

© 2026 BenchChem. All rights reserved.

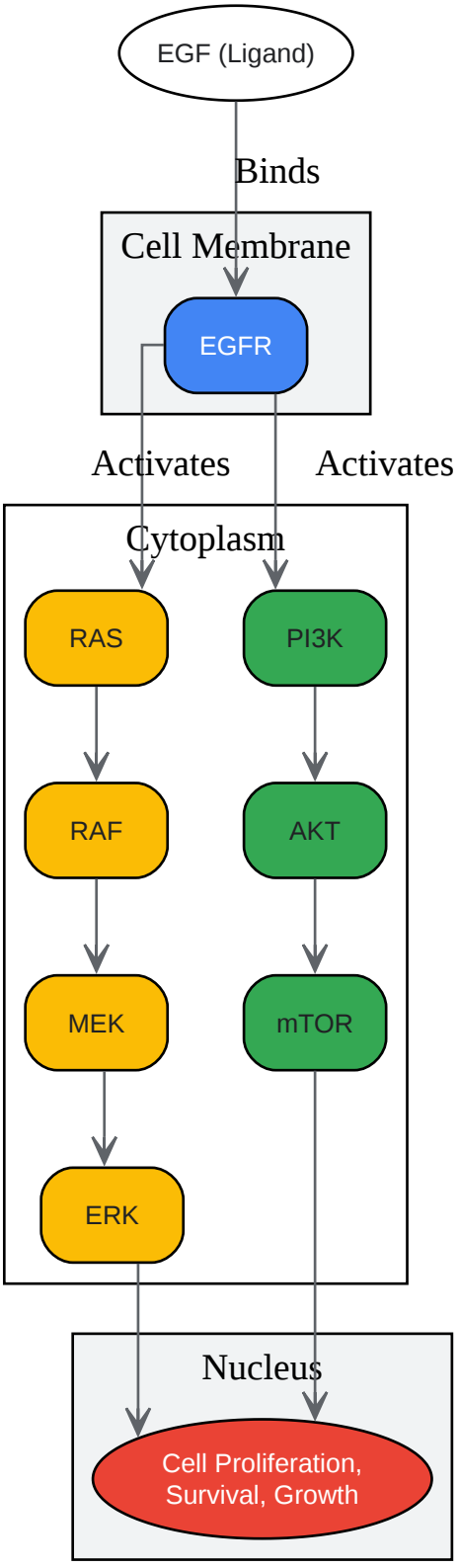

Click to download full resolution via product page

Caption: Simplified EGFR signaling pathway, a common target for pyrimidine-based inhibitors.

© 2026 BenchChem. All rights reserved.

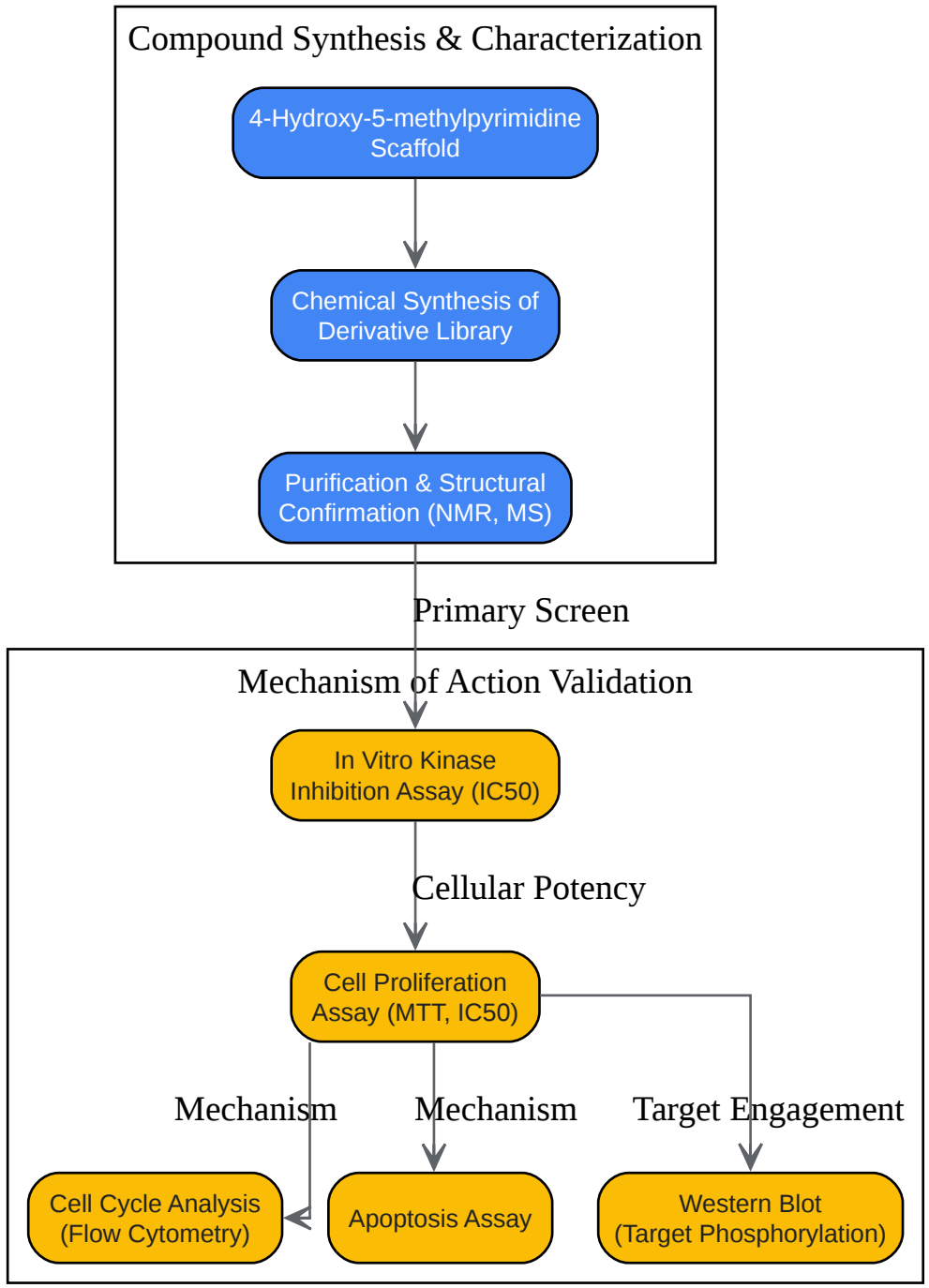

Click to download full resolution via product page

Caption: Experimental workflow for validating the mechanism of action of pyrimidine derivatives.

© 2026 BenchChem. All rights reserved.

Need Custom Synthesis?

BenchChem offers custom synthesis for rare earth carbides and specific isotopiclabeling.

Email: info@benchchem.com or Request Quote Online.

References

- 1. 四唑盐法(MTT)细胞活力和增殖检测方案 [sigmaaldrich.cn]
- 2. flowcytometry.utoronto.ca [flowcytometry.utoronto.ca]
- 3. Flow cytometry with PI staining | Abcam [abcam.com]
- To cite this document: BenchChem. [Validating the Mechanism of Action of Pyrimidine-Derived Compounds: A Comparative Guide]. BenchChem, [2026]. [Online PDF]. Available at: [https://www.benchchem.com/product/b101695/docs#validating-the-mechanism-of-action-of-pyrimidine-derived-compounds-a-comparative-guide]

Disclaimer & Data Validity:

The information provided in this document is for Research Use Only (RUO) and is strictly not intended for diagnostic or therapeutic procedures. While BenchChem strives to provide accurate protocols, we make no warranties, express or implied, regarding the fitness of this product for every specific experimental setup.

Technical Support: The protocols provided are for reference purposes. Unsure if this reagent suits your experiment?

Need Industrial/Bulk Grade? Request Custom Synthesis Quote

BenchChem

Our mission is to be the trusted global source of essential and advanced chemicals, empowering scientists and researchers to drive progress in science and industry.

Contact

Address: 3281 E Guasti Rd

Ontario, CA 91761, United States

Phone: (601) 213-4426

Email: info@benchchem.com

Contact our Ph.D. Support Team for a compatibility check

© 2026 BenchChem. All rights reserved.