Technical Support Center: Addressing Fluprofen Resistance in Cell Lines

Author: BenchChem Technical Support Team. **Date**: April 2026

Compound of Interest

Compound Name:	*Fluprofen*
CAS No.:	*17692-38-5*
Cat. No.:	*B101934*

Get Quote

This technical support center provides troubleshooting guides and frequently asked questions (FAQs) to help researchers address challenges related to **Fluprofen** resistance in cell lines. The information provided herein is intended as a general guide and may need to be adapted for your specific experimental context.

Frequently Asked Questions (FAQs)

Q1: What is the primary mechanism of action of **Fluprofen**?

Fluprofen, a non-steroidal anti-inflammatory drug (NSAID), primarily acts by non-selectively inhibiting the cyclooxygenase (COX) enzymes, COX-1 and COX-2.[1][2] These enzymes are crucial for the synthesis of prostaglandins from arachidonic acid, which are key mediators of inflammation, pain, and fever.[1][2] By blocking COX enzymes, **Fluprofen** reduces prostaglandin production, leading to its anti-inflammatory, analgesic, and antipyretic effects.[1][2]

Q2: Are there alternative, COX-independent mechanisms of action for **Fluprofen**?

© 2026 BenchChem. All rights reserved.

Yes, research has identified several COX-independent mechanisms. **Fluprofen** can induce the expression of the tumor suppressor gene p75NTR, which can inhibit tumor growth and metastasis.[3][4] It has also been shown to down-regulate pro-inflammatory genes like IL-6 and TNF-α, while up-regulating anti-inflammatory genes such as IL-4 and IL-10.[3] Additionally, **Fluprofen** can modulate signaling pathways such as the NF-κB and ERK pathways.[5]

Q3: What are the potential mechanisms by which cell lines can develop resistance to **Fluprofen**?

Several mechanisms can contribute to **Fluprofen** resistance:

- Altered Drug Targets: While not extensively documented for **Fluprofen**, mutations or altered expression of COX enzymes could potentially reduce drug binding and efficacy.
- Increased Drug Efflux: Overexpression of ATP-binding cassette (ABC) transporters, such as the multidrug resistance-associated protein 4 (MRP4), can actively pump **Fluprofen** out of the cell, reducing its intracellular concentration.[6][7][8] R-flurbiprofen, a non-COX-inhibiting enantiomer, has been shown to inhibit MRP4, thereby trapping prostaglandins within the cell.[7][8]
- Activation of Pro-Survival Signaling Pathways: Upregulation of pathways that promote cell survival and inhibit apoptosis, such as the PI3K/Akt or MAPK pathways, can counteract the cytotoxic effects of **Fluprofen**.
- Induction of Pro-Apoptotic Pathways: The anticancer effects of R-flurbiprofen have been linked to the induction of the tumor suppressor p75NTR via the p38 signaling pathway.[4] Resistance could emerge if this pathway is compromised.
- COX-Independent Resistance: Since NSAIDs can act through various COX-independent mechanisms, resistance may develop through alterations in these alternative targets.[9][10]

Troubleshooting Guide

Problem 1: My **Fluprofen**-resistant cell line shows a smaller-than-expected shift in IC50 value compared to the parental line.

© 2026 BenchChem. All rights reserved.

- Possible Cause: The method for generating the resistant cell line may not have been stringent enough.
  - Solution: When developing a resistant cell line, a gradual increase in drug concentration over a prolonged period is recommended. Ensure that the cells are consistently passaged in the presence of the selective pressure (**Fluprofen**).
- Possible Cause: The cytotoxicity assay is not optimized.
  - Solution: Optimize the seeding density of your cells and the duration of drug exposure. Ensure that the assay readout (e.g., absorbance in an MTT assay) is within the linear range.
- Possible Cause: The **Fluprofen** stock solution has degraded.
  - Solution: Prepare a fresh stock solution of **Fluprofen** and verify its concentration. Store aliquots at -20°C or -80°C to minimize degradation from freeze-thaw cycles.

Problem 2: I am not observing the expected changes in the expression of known resistance markers (e.g., MRP4, p75NTR) in my resistant cell line.

- Possible Cause: The primary antibody used in your Western blot is not specific or sensitive enough.
  - Solution: Validate your antibody using positive and negative controls. Titrate the antibody to determine the optimal concentration.
- Possible Cause: The protein extraction protocol is suboptimal.
  - Solution: Ensure your lysis buffer is appropriate for the target protein (e.g., membrane proteins like MRP4 may require specific detergents). Include protease and phosphatase inhibitors in your lysis buffer to prevent protein degradation.
- Possible Cause: The resistance mechanism in your cell line is independent of the markers being investigated.

© 2026 BenchChem. All rights reserved.

- Solution: Broaden your investigation to other potential resistance mechanisms. Consider performing RNA sequencing or proteomic analysis to identify novel pathways involved in the observed resistance.

Problem 3: My resistant cell line is growing significantly slower than the parental cell line, even in the absence of **Fluprofen**.

- Possible Cause: The development of resistance may have come with a fitness cost.
  - Solution: This is a common observation. Characterize the growth kinetics of both the parental and resistant cell lines using a growth curve assay. This growth differential should be considered when designing experiments.
- Possible Cause: The high concentration of **Fluprofen** used for selection was toxic and selected for a subpopulation with altered growth characteristics.
  - Solution: Try to establish a resistant line using a lower, more clinically relevant concentration of **Fluprofen** over a longer period.

Data Presentation: Comparative IC50 Values

The following table summarizes hypothetical IC50 values for parental and **Fluprofen**-resistant cell lines, illustrating how to present such data.

Cell Line	Parental IC50 (μM)	Resistant IC50 (μM)	Fold Resistance (Resistant IC50 / Parental IC50)
Pancreatic Cancer (PANC-1)	150	900	6.0
Colon Cancer (HT-29)	200	1200	6.0
Gastric Cancer (SGC-7901)	125	1000	8.0

Note: These are example values and will vary depending on the specific cell line and experimental conditions.

© 2026 BenchChem. All rights reserved.

Experimental Protocols

Determination of IC50 using MTT Assay

Objective: To determine the concentration of **Fluprofen** that inhibits cell growth by 50%.

Methodology:

- Cell Seeding: Seed cells in a 96-well plate at a predetermined optimal density (e.g., 5,000-10,000 cells/well) and allow them to adhere overnight.
- Drug Treatment: Prepare serial dilutions of **Fluprofen** in culture medium. Remove the old medium from the wells and add 100 µL of the drug dilutions. Include a vehicle control (e.g., DMSO) and a no-cell control (medium only).
- Incubation: Incubate the plate for 48-72 hours at 37°C in a humidified incubator with 5% CO2.
- MTT Addition: Add 20 µL of MTT solution (5 mg/mL in PBS) to each well and incubate for 4 hours.
- Formazan Solubilization: Remove the medium and add 150 µL of DMSO to each well to dissolve the formazan crystals.
- Absorbance Measurement: Read the absorbance at 570 nm using a microplate reader.
- Data Analysis: Calculate the percentage of cell viability relative to the vehicle control. Plot the percentage of viability against the log of the drug concentration and determine the IC50 value using non-linear regression analysis.

Western Blot Analysis of MRP4 Expression

Objective: To quantify the expression level of the MRP4 protein.

Methodology:

- Protein Extraction: Lyse cells in RIPA buffer supplemented with protease and phosphatase inhibitors.

© 2026 BenchChem. All rights reserved.

- Protein Quantification: Determine the protein concentration of the lysates using a BCA assay.
- SDS-PAGE: Load equal amounts of protein (20-30 µg) onto an SDS-polyacrylamide gel and separate the proteins by electrophoresis.
- Protein Transfer: Transfer the separated proteins to a PVDF membrane.
- Blocking: Block the membrane with 5% non-fat milk or BSA in TBST for 1 hour at room temperature.
- Primary Antibody Incubation: Incubate the membrane with the primary antibody against MRP4 overnight at 4°C.
- Secondary Antibody Incubation: Wash the membrane and incubate with an HRP-conjugated secondary antibody for 1 hour at room temperature.
- Detection: Visualize the protein bands using an enhanced chemiluminescence (ECL) substrate and an imaging system.
- Analysis: Quantify the band intensity using densitometry software and normalize to a loading control (e.g., β-actin or GAPDH).

Visualizations

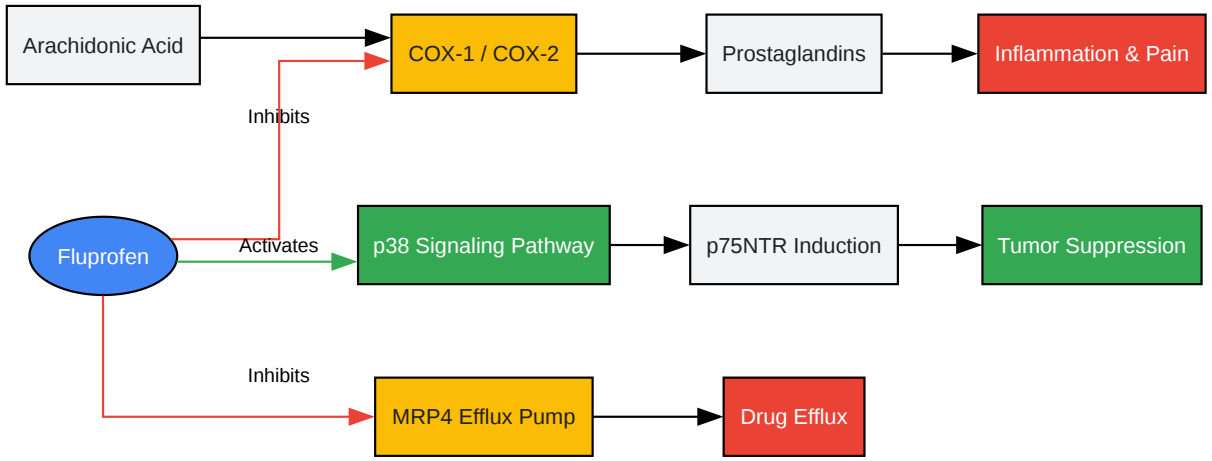

Click to download full resolution via product page

© 2026 BenchChem. All rights reserved.

Caption: Overview of **Fluprofen**'s mechanisms of action.

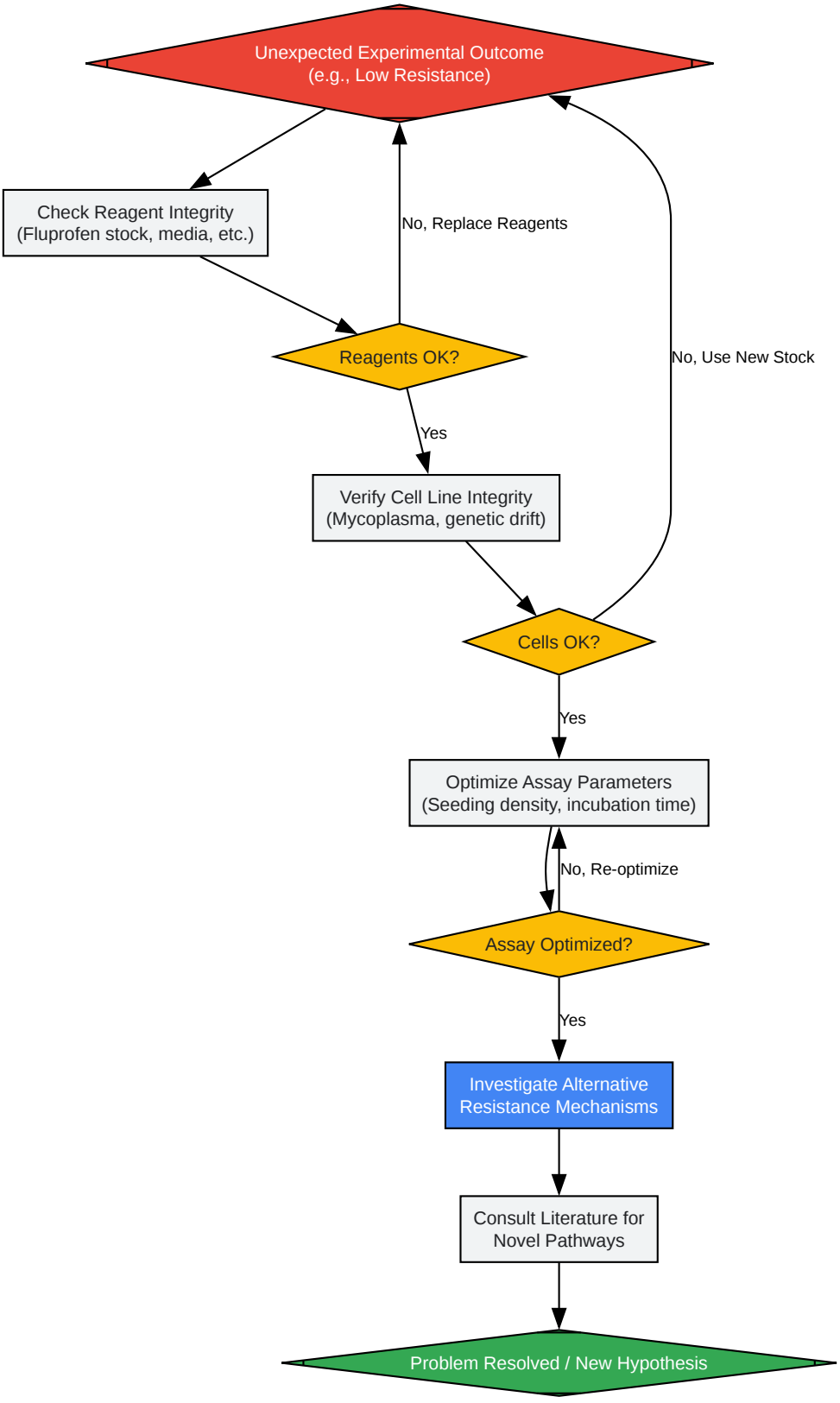

Click to download full resolution via product page

© 2026 BenchChem. All rights reserved.

Caption: A logical workflow for troubleshooting experiments.

Need Custom Synthesis?

BenchChem offers custom synthesis for rare earth carbides and specific isotopiclabeling.

Email: info@benchchem.com or Request Quote Online.

References

- 1. What is the mechanism of Flurbiprofen Sodium? [synapse.patsnap.com]
- 2. What is the mechanism of Flurbiprofen? [synapse.patsnap.com]
- 3. discovery.researcher.life [discovery.researcher.life]
- 4. R-flurbiprofen reverses multidrug resistance, proliferation and metastasis in gastric cancer cells by p75(NTR) induction - PubMed [pubmed.ncbi.nlm.nih.gov]
- 5. The nitrosylated flurbiprofen derivative HCT1026 inhibits cytokine-induced signalling through a novel mechanism of action - PubMed [pubmed.ncbi.nlm.nih.gov]
- 6. Flurbiprofen inhibits cAMP transport by MRP4/ABCC4 increasing the potency of gemcitabine treatment in PDAC cell models - PubMed [pubmed.ncbi.nlm.nih.gov]
- 7. mdpi.com [mdpi.com]
- 8. R-Flurbiprofen Traps Prostaglandins within Cells by Inhibition of Multidrug Resistance-Associated Protein-4 [mdpi.com]
- 9. COX-Independent Mechanisms of Cancer Chemoprevention by Anti-Inflammatory Drugs - PMC [pmc.ncbi.nlm.nih.gov]
- 10. NSAIDs inhibit tumorigenesis, but how? - PMC [pmc.ncbi.nlm.nih.gov]
- To cite this document: BenchChem. [Technical Support Center: Addressing Fluprofen Resistance in Cell Lines]. BenchChem, [2026]. [Online PDF]. Available at: [https://www.benchchem.com/product/b101934/docs#technical-support-center-addressing-fluprofen-resistance-in-cell-lines]

Disclaimer & Data Validity:

The information provided in this document is for Research Use Only (RUO) and is strictly not intended for diagnostic or therapeutic procedures. While BenchChem strives to provide

accurate protocols, we make no warranties, express or implied, regarding the fitness of this product for every specific experimental setup.

Technical Support: The protocols provided are for reference purposes. Unsure if this reagent suits your experiment?

Need Industrial/Bulk Grade? Request Custom Synthesis Quote

BenchChem

Our mission is to be the trusted global source of essential and advanced chemicals, empowering scientists and researchers to drive progress in science and industry.

Contact

Address: 3281 E Guasti Rd

Ontario, CA 91761, United States

Phone: (601) 213-4426

Email: info@benchchem.com

Contact our Ph.D. Support Team for a compatibility check

© 2026 BenchChem. All rights reserved.