Technical Guide: Biological Activity of 21-Hydroxyoligomycin A in Cancer Research

Author: BenchChem Technical Support Team. **Date**: May 2026

Compound of Interest	
Compound Name:	*21-Hydroxyoligomycin A*
CAS No.:	*102042-09-1*
Cat. No.:	*B010920*

Get Quote

Executive Summary

21-Hydroxyoligomycin A is a macrolide antibiotic and a specific analogue of the classical mitochondrial inhibitor Oligomycin A. While historically known for antifungal properties, recent pharmacological profiling has repositioned it as a high-value candidate in oncology. Unlike its parent compound, **21-Hydroxyoligomycin A** exhibits a distinct dual-mechanism of action: it functions as a potent inhibitor of K-Ras plasma membrane (PM) localization (IC50 in the low nanomolar range) while retaining the ability to inhibit mitochondrial F0F1-ATPase.

This guide provides a technical deep-dive into its biological activity, distinguishing its unique "Ras-disrupting" capability from general mitochondrial toxicity. It serves as a roadmap for integrating this compound into preclinical cancer models, specifically for K-Ras mutant phenotypes (e.g., colorectal, pancreatic, and lung cancers).

Chemical & Pharmacological Profile

Compound Identity:

- Name: **21-Hydroxyoligomycin A**[1][2]

© 2026 BenchChem. All rights reserved.

- Source: Isolated from Streptomyces cyaneogriseus ssp.[2] noncyanogenus.[2]
- Structural Class: Spiroketal macrolide.
- Key Structural Feature: Hydroxylation at the C-21 position distinguishes it from Oligomycin A, altering its solubility profile and binding kinetics.

Physicochemical Properties:

Property	Description	Implications for Research
Solubility	Soluble in DMSO, Ethanol, DMF, Methanol.[1] Practically insoluble in water.[1]	Stock solutions (e.g., 10 mM) must be prepared in DMSO. Avoid aqueous freeze-thaw cycles.
Stability	Stable at -20°C for >2 years in solid form.	Protect from light. Fresh working dilutions recommended for cell assays.
Selectivity	High selectivity for mammalian tumor cells over fungal cells.	Lower antifungal activity compared to Oligomycin A, suggesting a shift in target affinity.

Mechanisms of Action (MOA)

21-Hydroxyoligomycin A operates via a "Two-Hit" mechanism that compromises cancer cell survival through bioenergetic starvation and oncogenic signaling blockade.

Primary Mechanism: K-Ras Plasma Membrane Displacement

Mutant K-Ras proteins must localize to the plasma membrane (PM) to activate downstream effector pathways (RAF/MEK/ERK and PI3K/AKT). **21-Hydroxyoligomycin A** disrupts this localization with high potency.[1][2]

- Target: K-Ras trafficking/electrostatic association.

© 2026 BenchChem. All rights reserved.

- Effect: Displaces K-Ras from the PM to the cytoplasm/endomembranes.
- Potency: IC50 ~ 4.8 nM (in MDCK cells), significantly more potent than its cytotoxicity IC50, suggesting a specific regulatory effect distinct from general toxicity.

Secondary Mechanism: Mitochondrial F0F1-ATPase Inhibition

Like its parent compound, it binds to the F0 subunit of the mitochondrial ATP synthase.

- Effect: Blocks proton reentry into the mitochondrial matrix.
- Metabolic Consequence: Rapid depletion of cellular ATP, hyperpolarization of the mitochondrial membrane potential (

  ), and inhibition of oxidative phosphorylation (OXPHOS).
- Synergy: ATP depletion activates AMPK, which normally inhibits mTOR; however, the simultaneous loss of K-Ras signaling prevents compensatory survival mechanisms.

Tertiary Mechanism: P-glycoprotein (P-gp) Inhibition

- Activity: Acts as a micromolar inhibitor of the ABC transporter P-gp.[1][2]
- Clinical Relevance: Potential to reverse Multi-Drug Resistance (MDR) in chemotherapy-resistant cell lines (e.g., SW620 Ad300).

Visualization: Signaling & Mechanism

Diagram 1: The Dual-Hit Mechanism

This diagram illustrates how **21-Hydroxyoligomycin A** intersects with both Mitochondrial Bioenergetics and K-Ras Trafficking.

© 2026 BenchChem. All rights reserved.

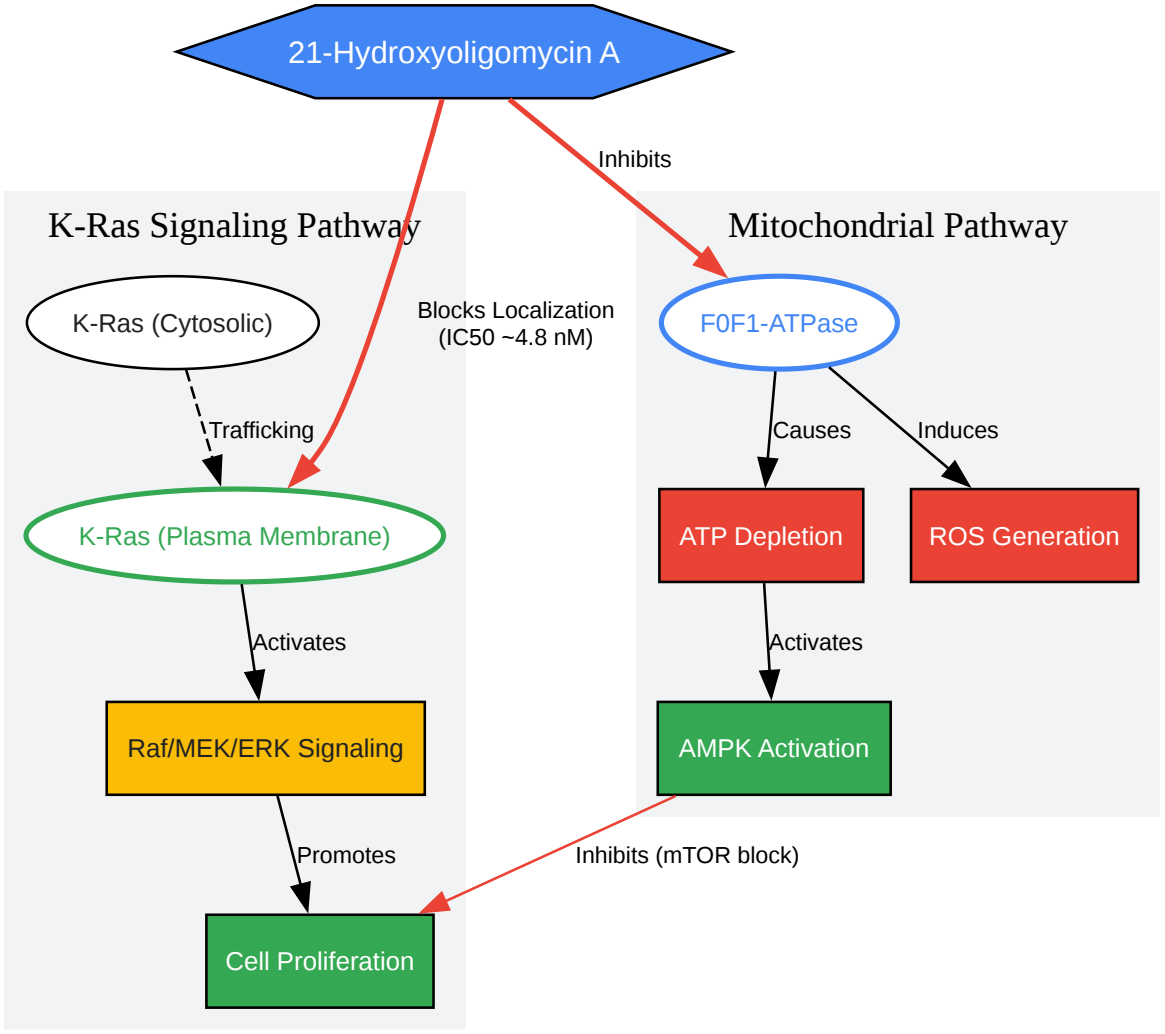

Click to download full resolution via product page

Caption: Dual-mechanism of **21-Hydroxyoligomycin A** targeting mitochondrial respiration and K-Ras membrane trafficking.

Quantitative Efficacy Data

The following data summarizes the potency of **21-Hydroxyoligomycin A** across different biological endpoints. Note the significant differential between K-Ras inhibition (nanomolar) and general cytotoxicity (micromolar), indicating a therapeutic window.

© 2026 BenchChem. All rights reserved.

Assay Endpoint	Cell Line / Target	IC50 / Potency	Reference
K-Ras PM Localization	MDCK (K-Ras-GFP)	4.82 ± 0.70 nM	[1, 2]
K-Ras PM Localization	General Range	1.5 – 14 nM	[1]
Cytotoxicity	SW620 (Colon Cancer)	14.4 ± 0.6 µM	[1]
Cytotoxicity	SW620 Ad300 (MDR+)	11.8 ± 3.1 µM	[1]
Cytotoxicity	HCT116 (Colorectal)	> 3 µM	[2]
P-gp Inhibition	P-glycoprotein	Micromolar range	[1]

Key Insight: The compound inhibits K-Ras localization at concentrations ~1000x lower than those required to kill the cell via general toxicity. This suggests that at low doses, it may act as a cytostatic agent or sensitizer rather than a direct cytotoxin.

Experimental Protocols

To validate the activity of **21-Hydroxyoligomycin A** in your workflow, use the following self-validating protocols.

Protocol A: K-Ras Plasma Membrane Localization Assay

Objective: To quantify the displacement of K-Ras from the plasma membrane.

Reagents:

- MDCK or HeLa cells transfected with GFP-K-RasG12V.
- **21-Hydroxyoligomycin A** (Stock: 10 mM in DMSO).
- Hoechst 33342 (Nuclear stain).
- Confocal Microscope.

© 2026 BenchChem. All rights reserved.

Workflow:

- Seeding: Plate GFP-K-Ras expressing cells on glass-bottom 96-well plates (5,000 cells/well). Incubate 24h.
- Treatment: Treat cells with serial dilutions of **21-Hydroxyoligomycin A** (0.1 nM to 100 nM) for 24 hours.
  - Control: 0.1% DMSO (Vehicle).
  - Positive Control:[3] Farnesyltransferase inhibitor (e.g., Tipifarnib) or Oligomycin A (for comparison).
- Fixation: Wash 1x PBS, Fix with 4% Paraformaldehyde (15 min, RT).
- Staining: Wash 3x PBS. Stain nuclei with Hoechst 33342 (1 µg/mL) for 10 min.
- Imaging: Acquire images using a confocal microscope (60x oil). Focus on the equatorial plane of the cells.
- Analysis: Calculate the ratio of Plasma Membrane Intensity vs. Cytosolic Intensity.
  - Result: A decrease in the PM/Cytosol ratio indicates successful inhibition.

Protocol B: Mitochondrial Stress Test (Seahorse XF)

Objective: To confirm mitochondrial target engagement via respiration kinetics.

Workflow:

- Seeding: Plate cancer cells (e.g., SW620) in XF96 cell culture microplates (20,000 cells/well).
- Preparation: Hydrate sensor cartridges overnight.
- Assay Medium: Replace culture media with unbuffered XF assay media (pH 7.4) supplemented with Glucose (10 mM), Pyruvate (1 mM), and Glutamine (2 mM).
- Injection Strategy:

© 2026 BenchChem. All rights reserved.

- Port A: **21-Hydroxyoligomycin A** (Titration: 1 nM – 1 µM).
- Port B: FCCP (Uncoupler, 1 µM) – To check maximal respiration.
- Port C: Rotenone/Antimycin A (0.5 µM) – To shut down ETC.

- Measurement: Measure Oxygen Consumption Rate (OCR).
  - Validation: A sharp drop in OCR immediately following Port A injection confirms ATP synthase inhibition. Compare the slope of inhibition with standard Oligomycin A.

Workflow Visualization

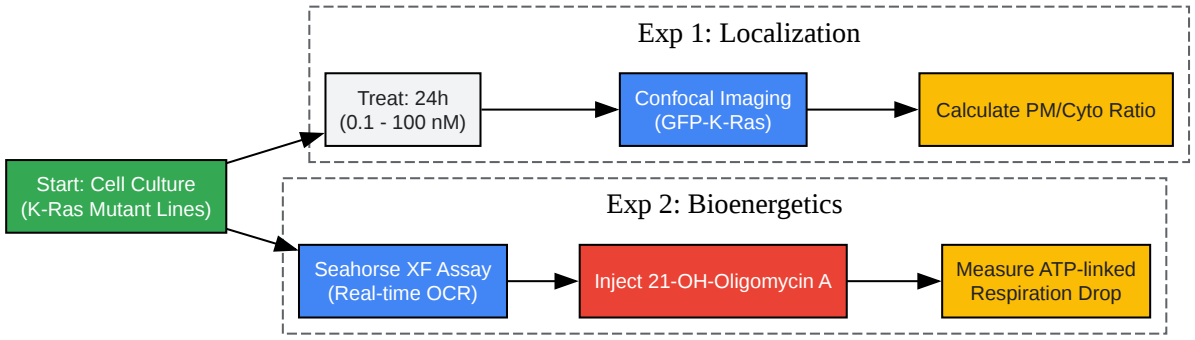

Click to download full resolution via product page

Caption: Parallel experimental workflows for validating K-Ras displacement and Mitochondrial inhibition.

References

- Salim, A. A., Tan, L., Huang, X. C., et al. (2016). Oligomycins as inhibitors of K-Ras plasma membrane localization.[1][2] Organic & Biomolecular Chemistry, 14(4), 1457-1462. Link
- Wagenaar, M. M., Gibson, T., Clardy, J., et al. (2017). Structure and Absolute Configuration of **21-Hydroxyoligomycin A**. Journal of Natural Products.
- APExBIO. (n.d.). 21-hydroxy Oligomycin A Product Information. APExBIO Technology. Link

© 2026 BenchChem. All rights reserved.

- Toku-E. (n.d.). **21-Hydroxyoligomycin A** - Product Profile.[1][4] Toku-E. Link
- Symmons, M. F., et al. (2013). The structure of the proton-translocating subunit c of the mitochondrial F1Fo-ATPase. Proceedings of the National Academy of Sciences. (Contextual reference for Oligomycin binding mechanism).

Need Custom Synthesis?

BenchChem offers custom synthesis for rare earth carbides and specific isotopiclabeling.

Email: info@benchchem.com or Request Quote Online.

Sources

- 1. toku-e.com [toku-e.com]
- 2. apexbt.com [apexbt.com]
- 3. pubs.acs.org [pubs.acs.org]
- 4. researchgate.net [researchgate.net]
- To cite this document: BenchChem. [Technical Guide: Biological Activity of 21-Hydroxyoligomycin A in Cancer Research]. BenchChem, [2026]. [Online PDF]. Available at: [https://www.benchchem.com/product/b010920/docs#technical-guide-biological-activity-of-21-hydroxyoligomycin-a-in-cancer-research]

Disclaimer & Data Validity:

The information provided in this document is for Research Use Only (RUO) and is strictly not intended for diagnostic or therapeutic procedures. While BenchChem strives to provide accurate protocols, we make no warranties, express or implied, regarding the fitness of this product for every specific experimental setup.

Technical Support: The protocols provided are for reference purposes. Unsure if this reagent suits your experiment?

Need Industrial/Bulk Grade? Request Custom Synthesis Quote

© 2026 BenchChem. All rights reserved.

BenchChem

Our mission is to be the trusted global source of essential and advanced chemicals, empowering scientists and researchers to drive progress in science and industry.

Contact

Address: 3281 E Guasti Rd

Ontario, CA 91761, United States

Phone: (601) 213-4426

Email: info@benchchem.com

Contact our Ph.D. Support Team for a compatibility check

© 2026 BenchChem. All rights reserved.